SIEMENS

4M x 4-Bit Dynamic RAM
2k & 4k Refresh
(Hyper Page Mode- EDO)

HYB5116405BJ/BT -50/-60/-70
HYB5117405BJ/BT -50/-60/-70

Advanced Information

- 4 194 304 words by 4-bit organization
- 0 to 70 °C operating temperature
- Performance:

		-50	-60	-70	
t_{RAC}	$\overline{RAS}$ access time	50	60	70	ns
t_{CAC}	$\overline{CAS}$ access time	13	15	20	ns
t_{AA}	Access time from address	25	30	35	ns
t_{RC}	Read/Write cycle time	84	104	124	ns
t_{HPC}	Hyper page mode (EDO) cycle time	20	25	30	ns

- Single + 5 V (± 10 %) supply
- Low power dissipation
  max. 550 mW active (HYB5116405BJ/BT-50)
  max. 495 mW active (HYB5116405BJ/BT-60)
  max. 440 mW active (HYB5116405BJ/BT-70)
  max. 660 mW active (HYB5117405BJ/BT-50)
  max. 605 mW active (HYB5117405BJ/BT-60)
  max. 550 mW active (HYB5117405BJ/BT-70)
  11 mW standby (TTL)
  5.5. mW standby (MOS)
- Output unlatched at cycle end allows two-dimensional chip selection
- Read, write, read-modify-write, $\overline{CAS}$-before-$\overline{RAS}$ refresh, $\overline{RAS}$-only refresh, hidden refresh, self refresh and test mode
- Hyper page mode (EDO) capability
- All inputs, outputs and clocks fully TTL-compatible
- 4096 refresh cycles / 64 ms for HYB5116405BJ/BT (4k-Refresh)
- 2048 refresh cycles / 32 ms for HYB5117405BJ/BT (2k-Refresh)
- Plastic Package: P-SOJ-26/24 300 mil
  P TSOPII-26/24 300 mil

The HYB 5116(7)405BJ/BT is a 16MBit dynamic RAM organized as 4194304 words by 4-bits. The HYB 5116(7)405BJ/BT utilizes a submicron CMOS silicon gate process technology, as well as advanced circuit techniques to provide wide operating margins, both internally and for the system user. Multiplexed address inputs permit the HYB 5116(7)405BJ/BT to be packaged in a standard SOJ 26/24 or TSOPII-26/24 plastic package, both with 300 mil width. These packages provide high system bit densities and are compatible with commonly used automatic testing and insertion equipment. System-oriented features include single + 5 V (± 10 %) power supply, direct interfacing with high-performance logic device families such as Schottky TTL.

Ordering Information

Type	Ordering Code	Package	Descriptions
HYB 5116405BJ-50	Q67100-Q1098	P-SOJ-26/24 300 mil	DRAM (access time 50 ns)
HYB 5116405BJ-60	Q67100-Q1099	P-SOJ-26/24 300 mil	DRAM (access time 60 ns)
HYB 5116405BJ-70	Q67100-Q1100	P-SOJ-26/24 300 mil	DRAM (access time 70 ns)
HYB 5116405BT-50	on request	P-TSOPII-26/24 300mil	DRAM (access time 50 ns)
HYB 5116405BT-60	on request	P-TSOPII-26/24 300mil	DRAM (access time 60 ns)
HYB 5116405BT-70	on request	P-TSOPII-26/24 300mil	DRAM (access time 70 ns)
HYB 5117405BJ-50	Q67100-Q1101	P-SOJ-26/24 300 mil	DRAM (access time 50 ns)
HYB 5117405BJ-60	Q67100-Q1102	P-SOJ-26/24 300 mil	DRAM (access time 60 ns)
HYB 5117405BJ-70	Q67100-Q1103	P-SOJ-26/24 300 mil	DRAM (access time 70 ns)
HYB 5117405BT-50	on request	P-TSOPII-26/24 300mil	DRAM (access time 50 ns)
HYB 5117405BT-60	on request	P-TSOPII-26/24 300mil	DRAM (access time 60 ns)
HYB 5117405BT-70	on request	P-TSOPII-26/24 300mil	DRAM (access time 70 ns)

Pin Names

A0-A11	Row Address Inputs for HYB5116405
A0-A9	Column Address Inputs for HYB5116405
A0-A10	Row and Column Address Inputs for HYB5117405
$\overline{RAS}$	Row Address Strobe
$\overline{OE}$	Output Enable
I/O1-I/O4	Data Input/Output
$\overline{CAS}$	Column Address Strobe
$\overline{WE}$	Read/Write Input
V_{CC}	Power Supply (+ 5 V)
V_{SS}	Ground (0 V)
N.C.	not connected

P-SOJ-26/24 300 mil
P-TSOPII-26/24 300 mil

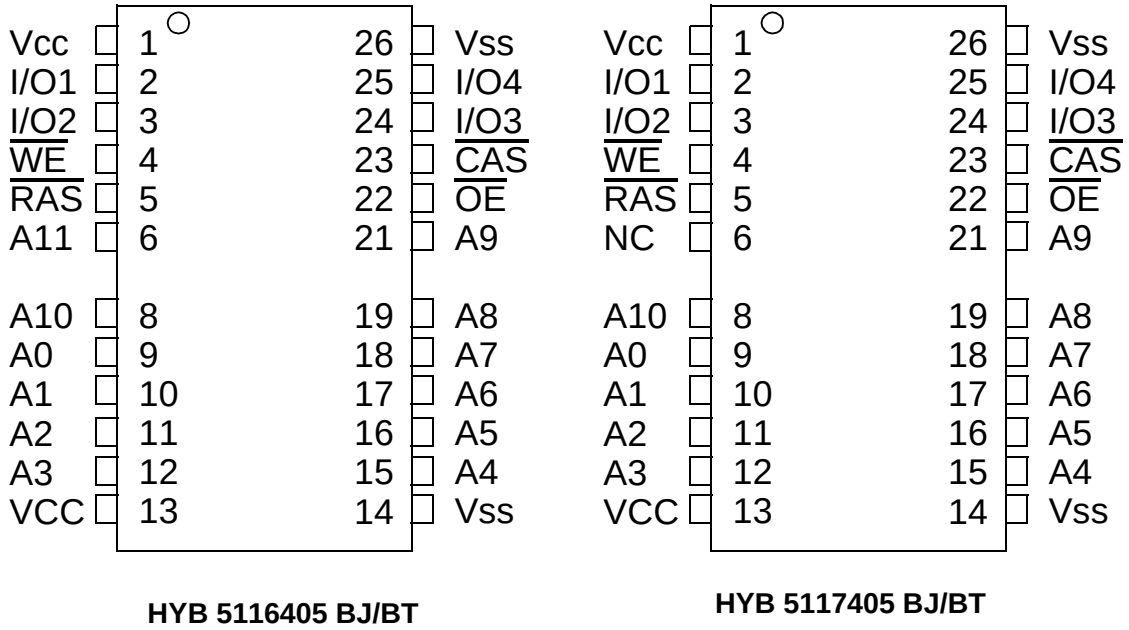

HYB 5116405 BJ/BT **HYB 5117405 BJ/BT**

Pin Configuration

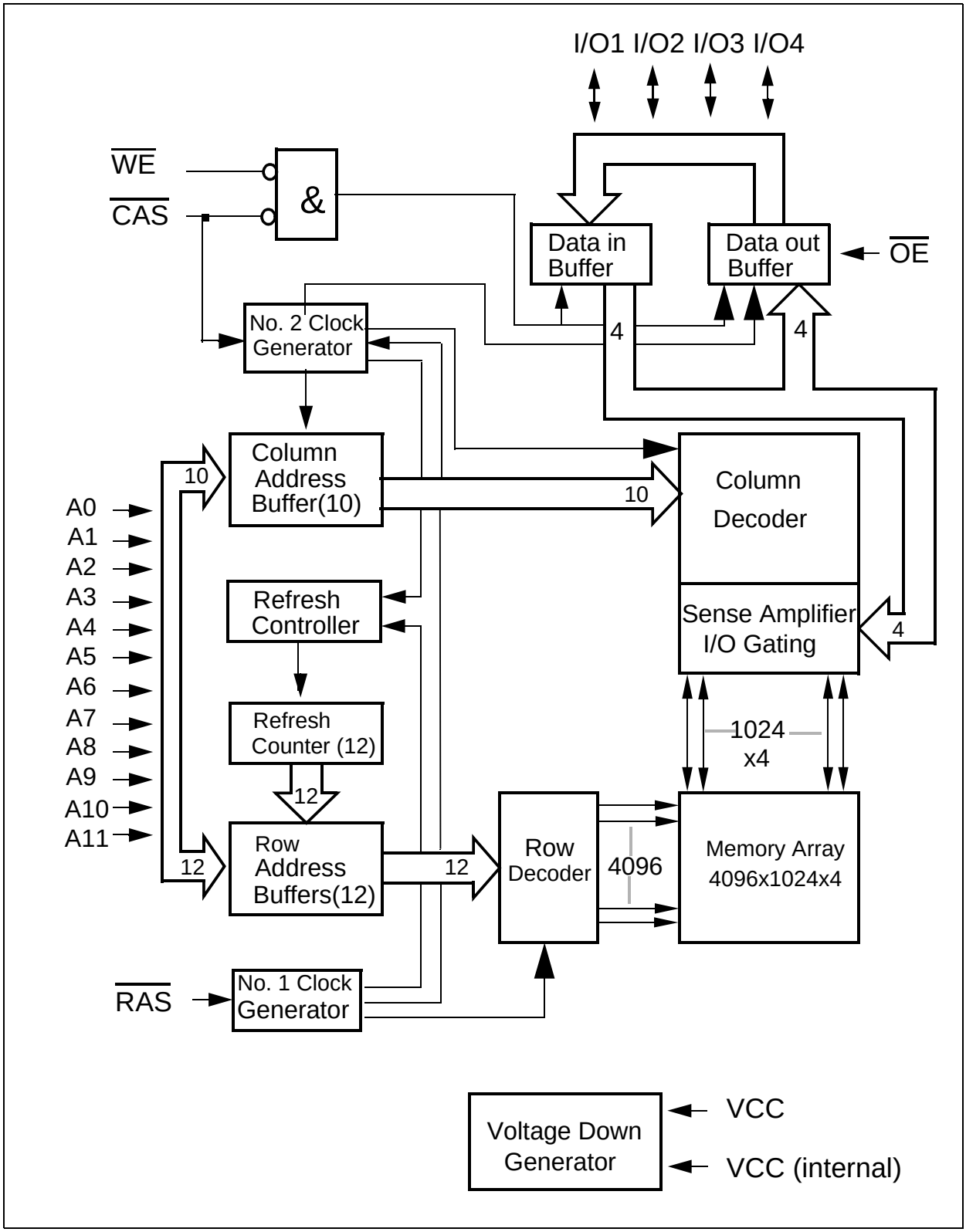

Block Diagram for HYB 5116405

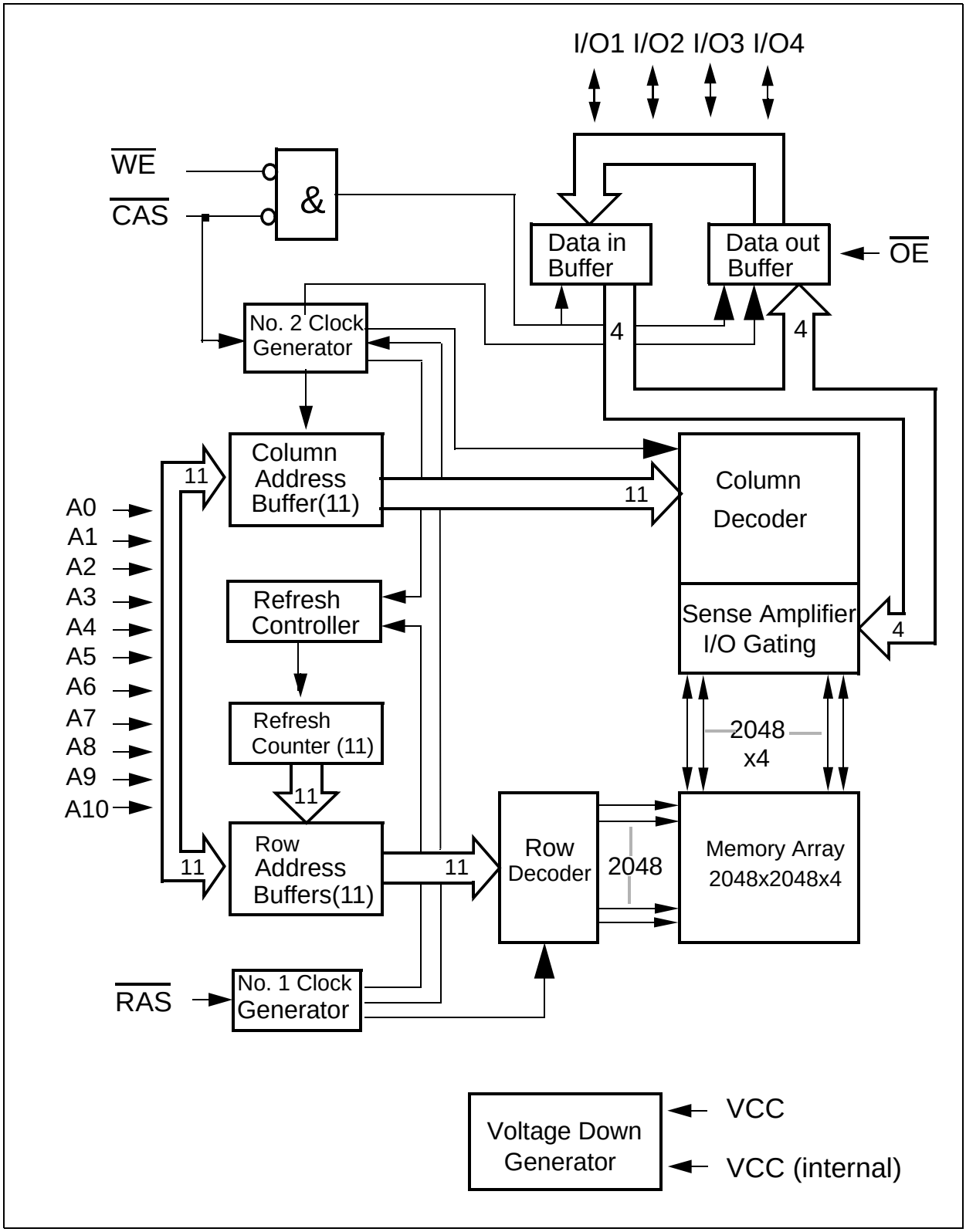

Block Diagram for HYB 5117405

Absolute Maximum Ratings

Operating temperature range .....0 to 70 °C

Storage temperature range.....– 55 to 150 °C

Input/output voltage .....-0.5 to min (Vcc+0.5,7.0) V

Power supply voltage.....-1.0V to 7.0 V

Power dissipation..... 1.0 W

Data out current (short circuit) ..... 50 mA

Note:

Stresses above those listed under “Absolute Maximum Ratings” may cause permanent damage of the device. Exposure to absolute maximum rating conditions for extended periods may affect device reliability.

DC Characteristics(note : values in brackets for HYB 5117405 BJ/BT)

T_A = 0 to 70 °C, V_{SS} = 0 V, V_{CC} = 5 V ± 10 %; t_T = 2 ns

Parameter	Symbol	Limit Values		Unit	Test Condition
		min.	max.		
Input high voltage	V_{IH}	2.4	Vcc+0.5	V	1)
Input low voltage	V_{IL}	– 0.5	0.8	V	1)
Output high voltage (I_{OUT} = – 5 mA)	V_{OH}	2.4	–	V	1)
Output low voltage (I_{OUT} = 4.2 mA)	V_{OL}	–	0.4	V	1)
Input leakage current (0 V ≤ V_{IH} ≤ Vcc + 0.3V, all other pins = 0 V)	$I_{I(L)}$	– 10	10	µA	1)
Output leakage current (DO is disabled, 0 V ≤ V_{OUT} ≤ Vcc + 0.3V)	$I_{O(L)}$	– 10	10	µA	1)
Average V_{CC} supply current: -50 ns version -60 ns version -70 ns version ($\overline{RAS}$, $\overline{CAS}$, address cycling: t_{RC} = t_{RC} min.)	I_{CC1}	 – – –	 100(120) 90 (110) 80 (100)	 mA mA mA	 2) 3) 4) 2) 3) 4) 2) 3) 4)
Standby V_{CC} supply current ($\overline{RAS}$ = $\overline{CAS}$ = V_{IH})	I_{CC2}	–	2	mA	–
Average V_{CC} supply current, during $\overline{RAS}$-only refresh cycles: -50 ns version -60 ns version -70 ns version ($\overline{RAS}$ cycling, $\overline{CAS}$ = V_{IH}, t_{RC} = t_{RC} min.)	I_{CC3}	 – – –	 100(120) 90 (110) 80 (100)	 mA mA mA	 2) 4) 2) 4) 2) 4)

DC Characteristics(note : values in brackets for HYB 5117405 BJ/BT)

T_A = 0 to 70 °C, V_{SS} = 0 V, V_{CC} = 5 V ± 10 %; t_T = 2 ns

Parameter	Symbol	Limit Values		Unit	Test Condition
		min.	max.		
Average V_{CC} supply current, during hyper page mode: -50 ns version -60 ns version -70 ns version ($\overline{RAS}$ = V_{IL}, $\overline{CAS}$, address cycling: t_{PC} = t_{PC} min.)	I_{CC4}	– – –	70 (70) 55 (55) 45 (45)	mA mA mA	2) 3) 4) 2) 3) 4) 2) 3) 4)
Standby V_{CC} supply current ($\overline{RAS}$ = $\overline{CAS}$ = V_{CC} – 0.2 V)	I_{CC5}	–	1	mA	1)
Average V_{CC} supply current, during $\overline{CAS}$-before-RAS refresh mode: -50 ns version -60 ns version -70 ns version ($\overline{RAS}$, $\overline{CAS}$ cycling: t_{RC} = t_{RC} min.)	I_{CC6}	– – –	100(120) 90 (110) 80 (100)	mA mA mA	2) 4) 2) 4) 2) 4)
Average Self Refresh Current (CBR cycle with tRAS>TRASSmin., $\overline{CAS}$ held low, $\overline{WE}$=Vcc-0.2V, Address and Din=Vcc - 0.2V or 0.2V)	I_{CC7}	–	1	mA	

Capacitance

T_A = 0 to 70 °C, V_{CC} = 5 V ± 10 %, f = 1 MHz

Parameter	Symbol	Limit Values		Unit
		min.	max.	
Input capacitance (A0 to A10,A11)	C_{I1}	–	5	pF
Input capacitance ($\overline{RAS}$, $\overline{CAS}$, $\overline{WE}$, $\overline{OE}$)	C_{I2}	–	7	pF
I/O capacitance (I/O1-I/O4)	C_{IO}	–	7	pF

AC Characteristics [5)6)]

16E

T_A = 0 to 70 °C, V_{CC} = 5 V ± 10 %, t_T = 2 ns

Parameter	Symbol	Limit Values						Unit	Note
		-50		-60		-70			
		min.	max.	min.	max.	min.	max.		
common parameters									
Random read or write cycle time	t_{RC}	84	–	104	–	124	–	ns	
$\overline{RAS}$ precharge time	t_{RP}	30	–	40	–	50	–	ns	
$\overline{RAS}$ pulse width	t_{RAS}	50	10k	60	10k	70	10k	ns	
$\overline{CAS}$ pulse width	t_{CAS}	8	10k	10	10k	12	10k	ns	
Row address setup time	t_{ASR}	0	–	0	–	0	–	ns	
Row address hold time	t_{RAH}	8	–	10	–	10	–	ns	
Column address setup time	t_{ASC}	0	–	0	–	0	–	ns	
Column address hold time	t_{CAH}	8	–	10	–	12	–	ns	
$\overline{RAS}$ to $\overline{CAS}$ delay time	t_{RCD}	12	37	14	45	14	53	ns	
$\overline{RAS}$ to column address delay	t_{RAD}	10	25	12	30	12	35	ns	
$\overline{RAS}$ hold time	t_{RSH}	13		15	–	17	–	ns	
$\overline{CAS}$ hold time	t_{CSH}	40		50	–	60	–	ns	
$\overline{CAS}$ to $\overline{RAS}$ precharge time	t_{CRP}	5	–	5	–	5	–	ns	
Transition time (rise and fall)	t_T	1	50	1	50	1	50	ns	7
Refresh period for HYB5116405	t_{REF}	–	64	–	64	–	64	ms	
Refresh period for HYB5117405	t_{REF}	–	32	–	32	–	32	ms	
Read Cycle									
Access time from $\overline{RAS}$	t_{RAC}	–	50	–	60	–	70	ns	8, 9
Access time from $\overline{CAS}$	t_{CAC}	–	13	–	15	–	17	ns	8, 9
Access time from column address	t_{AA}	–	25	–	30	–	35	ns	8,10
$\overline{OE}$ access time	t_{OEA}	–	13	–	15	–	17	ns	
Column address to $\overline{RAS}$ lead time	t_{RAL}	25	–	30	–	35	–	ns	
Read command setup time	t_{RCS}	0	–	0	–	0	–	ns	
Read command hold time	t_{RCH}	0	–	0	–	0	–	ns	11
Read command hold time referenced to $\overline{RAS}$	t_{RRH}	0	–	0	–	0	–	ns	11
$\overline{CAS}$ to output in low-Z	t_{CLZ}	0	–	0	–	0	–	ns	8
Output buffer turn-off delay	t_{OFF}	0	13	0	15	0	17	ns	12

AC Characteristics *(cont'd)* [5][6]

16E

T_A = 0 to 70 °C, V_{CC} = 5 V ± 10 %, t_T = 2 ns

Parameter	Symbol	Limit Values						Unit	Note
		-50		-60		-70			
		min.	max.	min.	max.	min.	max.		
Output turn-off delay from $\overline{OE}$	t_{OEZ}	0	13	0	15	0	17	ns	12
Data to $\overline{CAS}$ low delay	t_{DZC}	0	–	0	–	0	–	ns	13
Data to $\overline{OE}$ low delay	t_{DZO}	0	–	0	–	0	–	ns	13
$\overline{CAS}$ high to data delay	t_{CDD}	10	–	13	–	15	–	ns	14
$\overline{OE}$ high to data delay	t_{ODD}	10	–	13	–	15	–	ns	14
Write Cycle									
Write command hold time	t_{WCH}	8	–	10	–	10	–	ns	
Write command pulse width	t_{WP}	8	–	10	–	10	–	ns	
Write command setup time	t_{WCS}	0	–	0	–	0	–	ns	15
Write command to $\overline{RAS}$ lead time	t_{RWL}	13	–	15	–	17	–	ns	
Write command to $\overline{CAS}$ lead time	t_{CWL}	13	–	15	–	17	–	ns	
Data setup time	t_{DS}	0	–	0	–	0	–	ns	16
Data hold time	t_{DH}	8	–	10	–	12	–	ns	16
Read-modify-Write Cycle									
Read-write cycle time	t_{RWC}	113	–	138	–	162	–	ns	
$\overline{RAS}$ to WE delay time	t_{RWD}	64	–	77	–	89	–	ns	15
$\overline{CAS}$ to $\overline{WE}$ delay time	t_{CWD}	27	–	32	–	36	–	ns	15
Column address to $\overline{WE}$ delay time	t_{AWD}	39	–	47	–	54	–	ns	15
$\overline{OE}$ command hold time	t_{OEH}	10	–	13	–	15	–	ns	
Hyper Page Mode (EDO) Cycle									
Hyper page mode (EDO) cycle time	t_{HPC}	20	–	25	–	30	–	ns	
$\overline{CAS}$ precharge time	t_{CP}	8	–	10	–	10	–	ns	
Access time from $\overline{CAS}$ precharge	t_{CPA}	–	27	–	32	–	37	ns	7
Output data hold time	t_{COH}	5	–	5	–	5	–	ns	
$\overline{RAS}$ pulse width in EDO mode	t_{RAS}	50	200k	60	200k	70	200k	ns	
$\overline{CAS}$ precharge to $\overline{RAS}$ Delay	t_{RHPC}	27	–	32	–	37	–	ns	

AC Characteristics *(cont'd)* [5][6]

16E

T_A = 0 to 70 °C, V_{CC} = 5 V ± 10 %, t_T = 2 ns

Parameter	Symbol	Limit Values						Unit	Note
		-50		-60		-70			
		min.	max.	min.	max.	min.	max.		
Hyper Page Mode (EDO) Read-modify-Write Cycle									
Hyper page mode (EDO) read-write cycle time	t_{PRWC}	58	–	68	–	77	–	ns	
$\overline{CAS}$ precharge to $\overline{WE}$	t_{CPWD}	41	–	49	–	56	–	ns	
$\overline{CAS}$-before-$\overline{RAS}$ Refresh Cycle									
$\overline{CAS}$ setup time	t_{CSR}	10	–	10	–	10	–	ns	
$\overline{CAS}$ hold time	t_{CHR}	10	–	10	–	10	–	ns	
$\overline{RAS}$ to $\overline{CAS}$ precharge time	t_{RPC}	5	–	5	–	5	–	ns	
Write to $\overline{RAS}$ precharge time	t_{WRP}	10	–	10	–	10	–	ns	
Write hold time referenced to $\overline{RAS}$	t_{WRH}	10	–	10	–	10	–	ns	
$\overline{CAS}$-before-$\overline{RAS}$ Counter Test Cycle									
$\overline{CAS}$ precharge time	t_{CPT}	35	–	40	–	40	–	ns	
Self Refresh Cycle									
$\overline{RAS}$ pulse width	t_{RASS}	100k	_	100k	_	100k	_	ns	17
$\overline{RAS}$ precharge	t_{RPS}	95	_	110	_	130	_	ns	17
$\overline{CAS}$ hold time	t_{CHS}	-50	_	-50	_	-50	_	ns	17
Test Mode									
Write command setup time	t_{WTS}	10	–	10	–	10	–	ns	
Write command hold time	t_{WTH}	10	–	10	–	10	–	ns	
$\overline{CAS}$ hold time	t_{CHRT}	30	–	30	–	30	–	ns	

Notes:

1) All voltages are referenced to V_{SS}.

2) I_{CC1}, I_{CC3}, I_{CC4} and I_{CC6} depend on cycle rate.

3) I_{CC1} and I_{CC4} depend on output loading. Specified values are obtained with the output open.

4) Address can be changed once or less while RAS = Vil. In case of ICC4 it can be changed once or less during a hyper page mode (EDO) cycle

5) An initial pause of 200 µs is required after power-up followed by 8 $\overline{RAS}$ cycles of which at least one cycle has to be a refresh cycle, before proper device operation is achieved. In case of using the internal refresh counter, a minimum of 8 $\overline{CAS}$-before-$\overline{RAS}$ initialization cycles instead of 8 $\overline{RAS}$ cycles are required.

6) AC measurements assume t_T = 2 ns.

7) $V_{IH\ (min.)}$ and $V_{IL\ (max.)}$ are reference levels for measuring timing of input signals. Transition times are also measured between V_{IH} and V_{IL}.

8) Measured with the specified current load and 100 pF at Vol = 0.8 V and Voh = 2.0 V. Access time is determined by the latter of t_{RAC}, t_{CAC}, t_{AA}, t_{CPA}, t_{OEA}. t_{CAC} is measured from tristate.

9) Operation within the $t_{RCD\ (max.)}$ limit ensures that $t_{RAC\ (max.)}$ can be met. $t_{RCD\ (max.)}$ is specified as a reference point only. If t_{RCD} is greater than the specified $t_{RCD\ (max.)}$ limit, then access time is controlled by t_{CAC}.

10) Operation within the $t_{RAD\ (max.)}$ limit ensures that $t_{RAC\ (max.)}$ can be met. $t_{RAD\ (max.)}$ is specified as a reference point only. If t_{RAD} is greater than the specified $t_{RAD\ (max.)}$ limit, then access time is controlled by t_{AA}.

11) Either t_{RCH} or t_{RRH} must be satisfied for a read cycle.

12) $t_{OFF\ (max.)}$, $t_{OEZ\ (max.)}$ define the time at which the output achieves the open-circuit conditions and are not referenced to output voltage levels. t_{OFF} is referenced from the rising edge of $\overline{RAS}$ or $\overline{CAS}$, whichever occurs last.

13) Either t_{DZC} or t_{DZO} must be satisfied.

14) Either t_{CDD} or t_{ODD} must be satisfied.

15) t_{WCS}, t_{RWD}, t_{CWD} and t_{AWD} are not restrictive operating parameters. They are included in the data sheet as electrical characteristics only. If $t_{WCS} > t_{WCS\ (min.)}$, the cycle is an early write cycle and data out pin will remain open-circuit (high impedance) through the entire cycle; if $t_{RWD} > t_{RWD\ (min.)}$, $t_{CWD} > t_{CWD\ (min.)}$ and $t_{AWD} > t_{AWD\ (min.)}$, the cycle is a read-write cycle and I/O will contain data read from the selected cells. If neither of the above sets of conditions is satisfied, the condition of I/O (at access time) is indeterminate.

16) These parameters are referenced to the $\overline{CAS}$ leading edge in early write cycles and to the $\overline{WE}$ leading edge in read-write cycles.

17) When using Self Refresh mode, the following refresh operations must be performed to ensure proper DRAM operation:

    If row addresses are being refreshed on an evenly distributed manner over the refresh interval using CBR refresh cycles, then only one CBR cycle must be performed immediately after exit from Self Refresh.

    If row addresses are being refreshed in any other manner (ROR - Distributed/Burst; or CBR-Burst) over the refresh interval, then a full set of row refreshes must be performed immediately before entry to and immediately after exit from Self Refresh

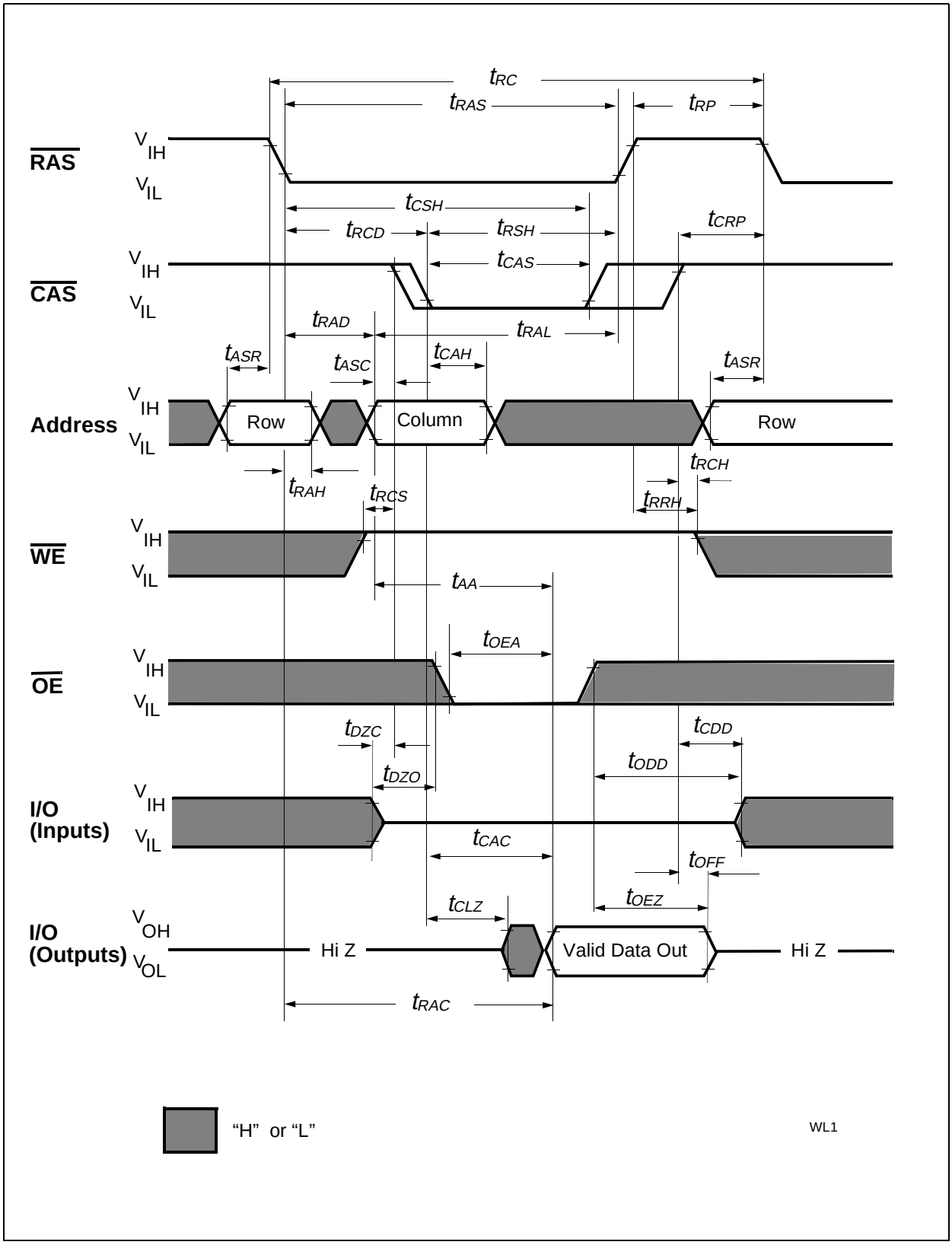
tRC
tRAS
tRP
RAS
VIH
VIL
tCSH
tRCD
tRSH
tCRP
CAS
tCAS
tRAD
tRAL
tASR
tASC
tCAH
Address
Row
Column
tRCH
tRAH
tRCS
tRRH
WE
tAA
tOEA
OE
tDZC
tCDD
tDZO
tODD
I/O (Inputs)
tCAC
tOFF
tCLZ
tOEZ
I/O (Outputs)
VOH
VOL
Hi Z
Valid Data Out
tRAC
"H" or "L"
WL1

Read Cycle

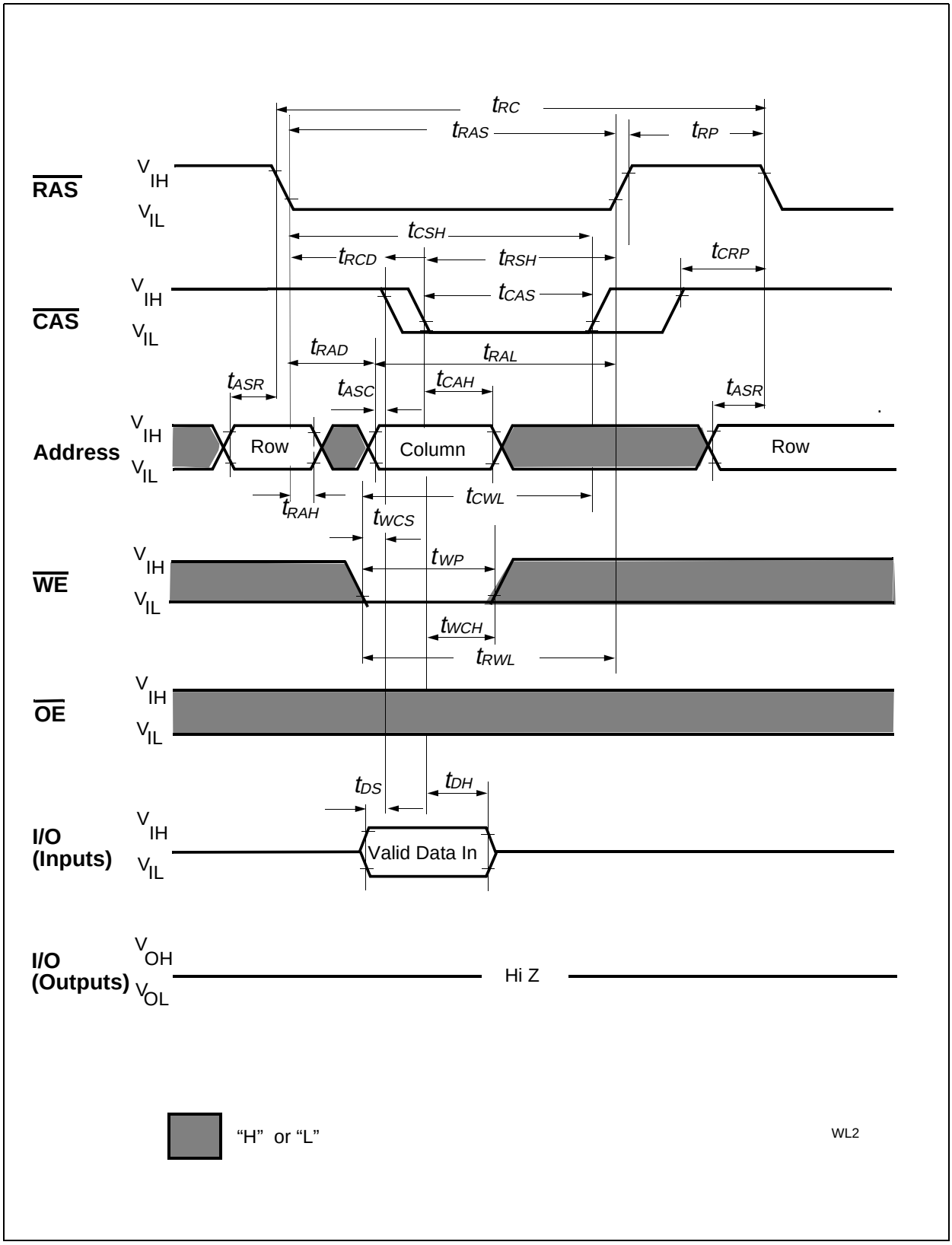

Write Cycle (Early Write)

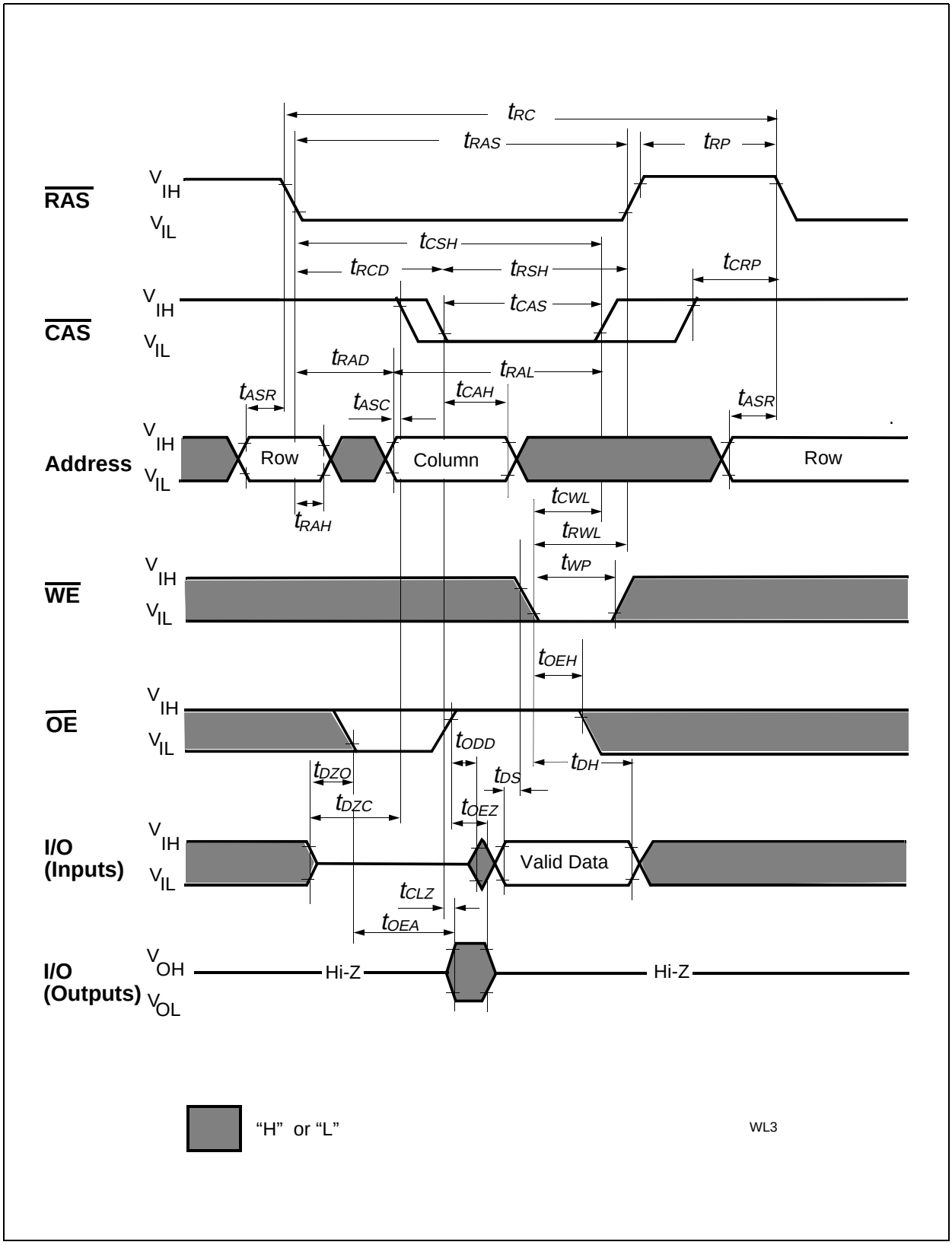

Write Cycle ($\overline{OE}$ Controlled Write)

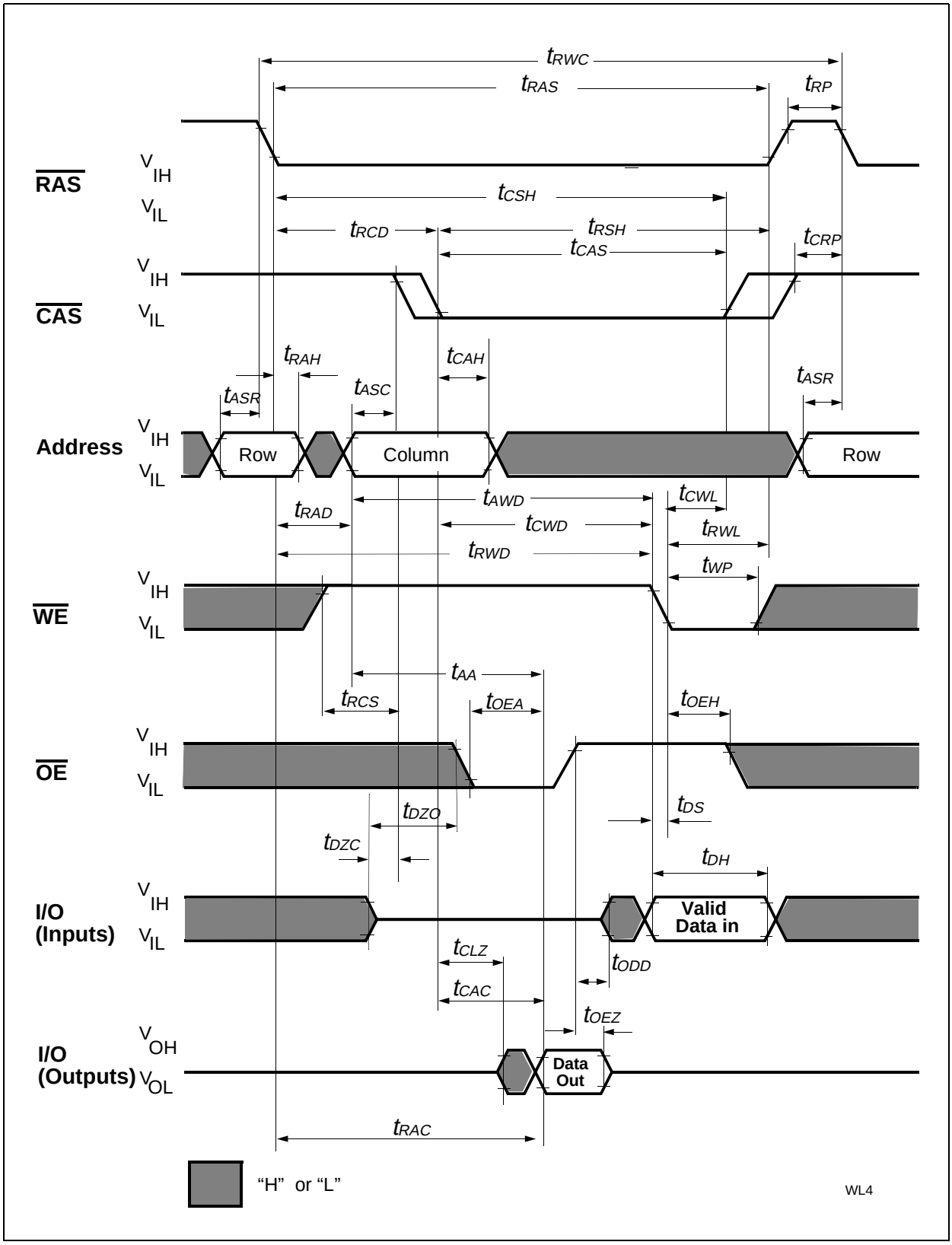

Read-Write (Read-Modify-Write) Cycle

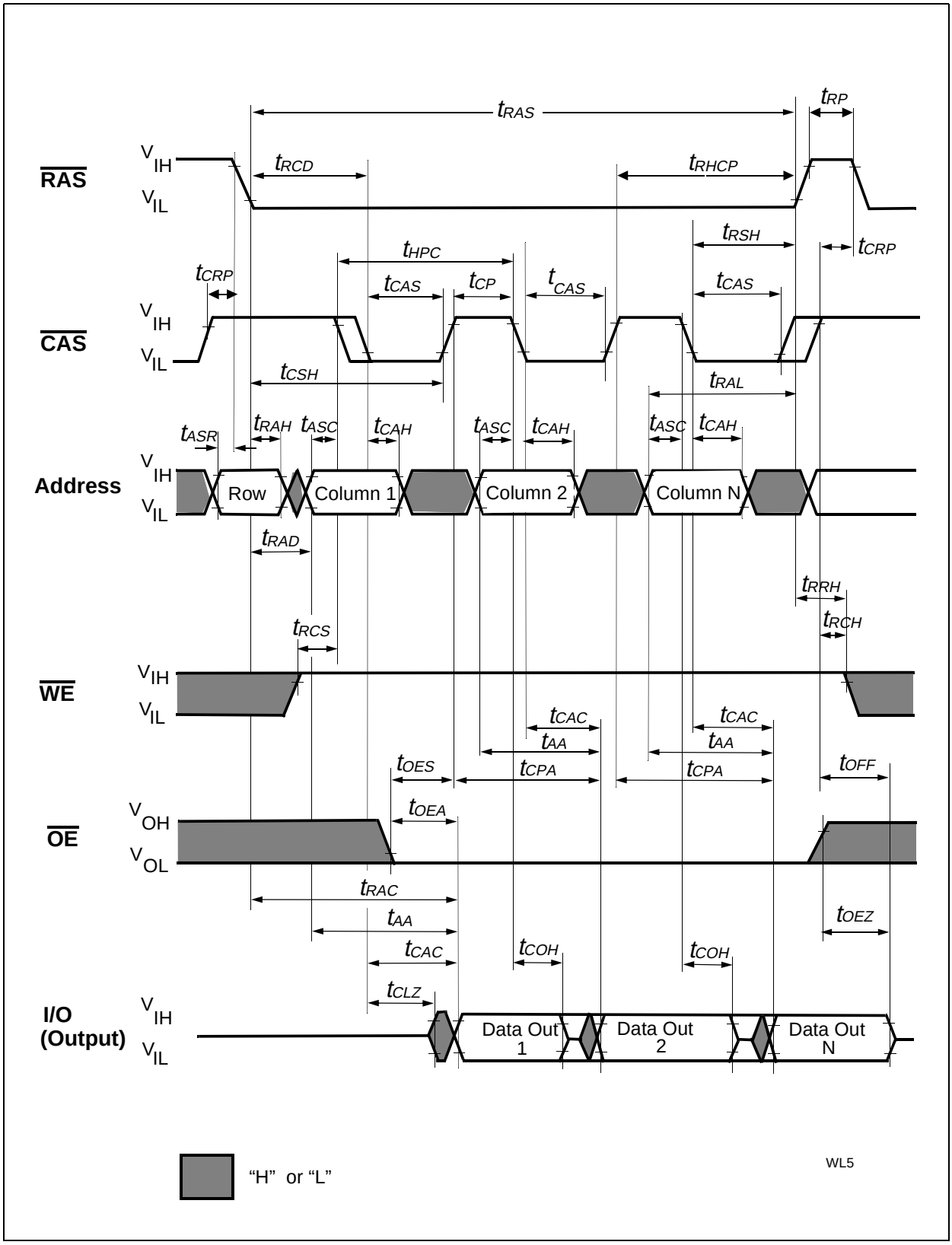

Hyper Page Mode (EDO) Read Cycle

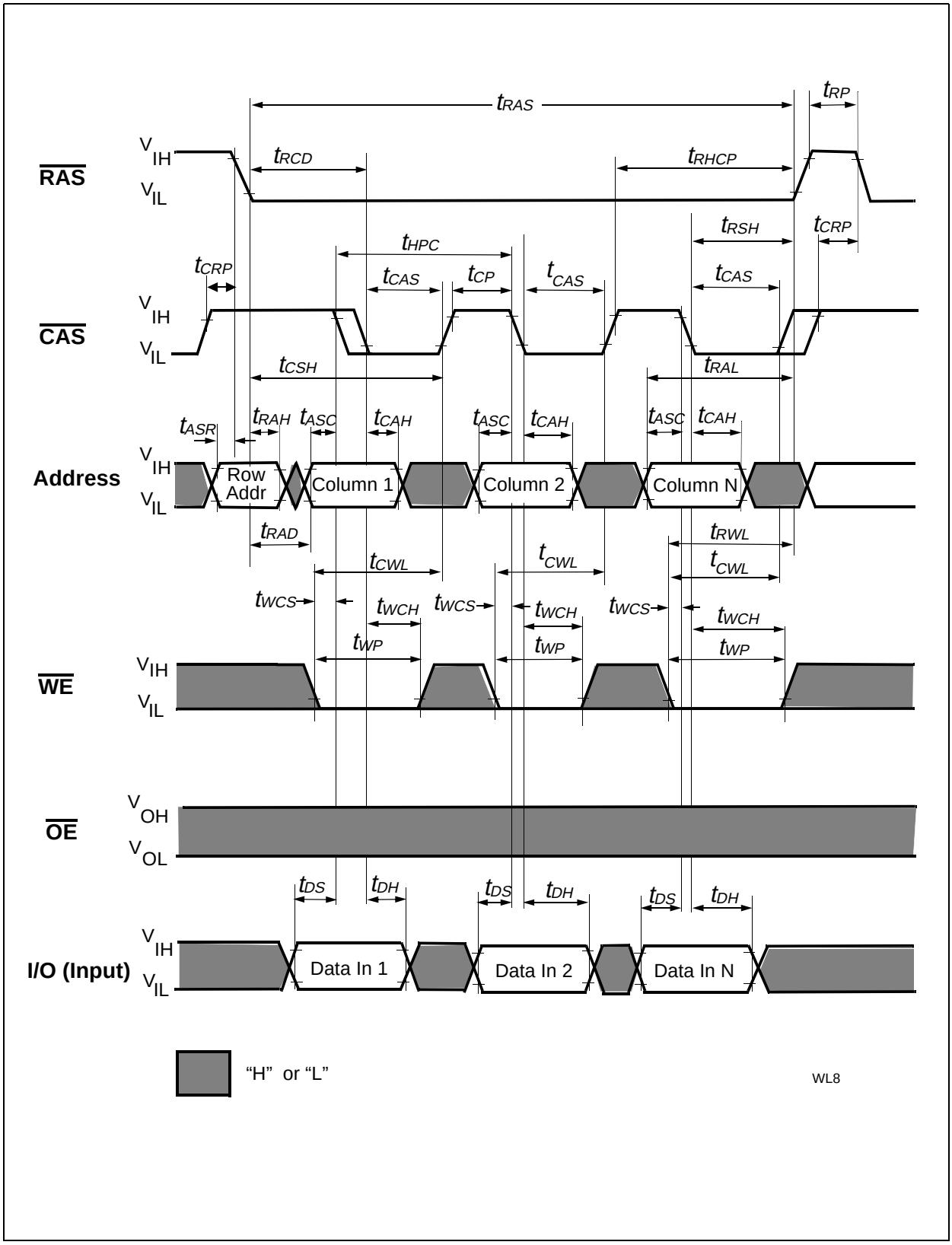

Hyper Page Mode (EDO) Early Write Cycle

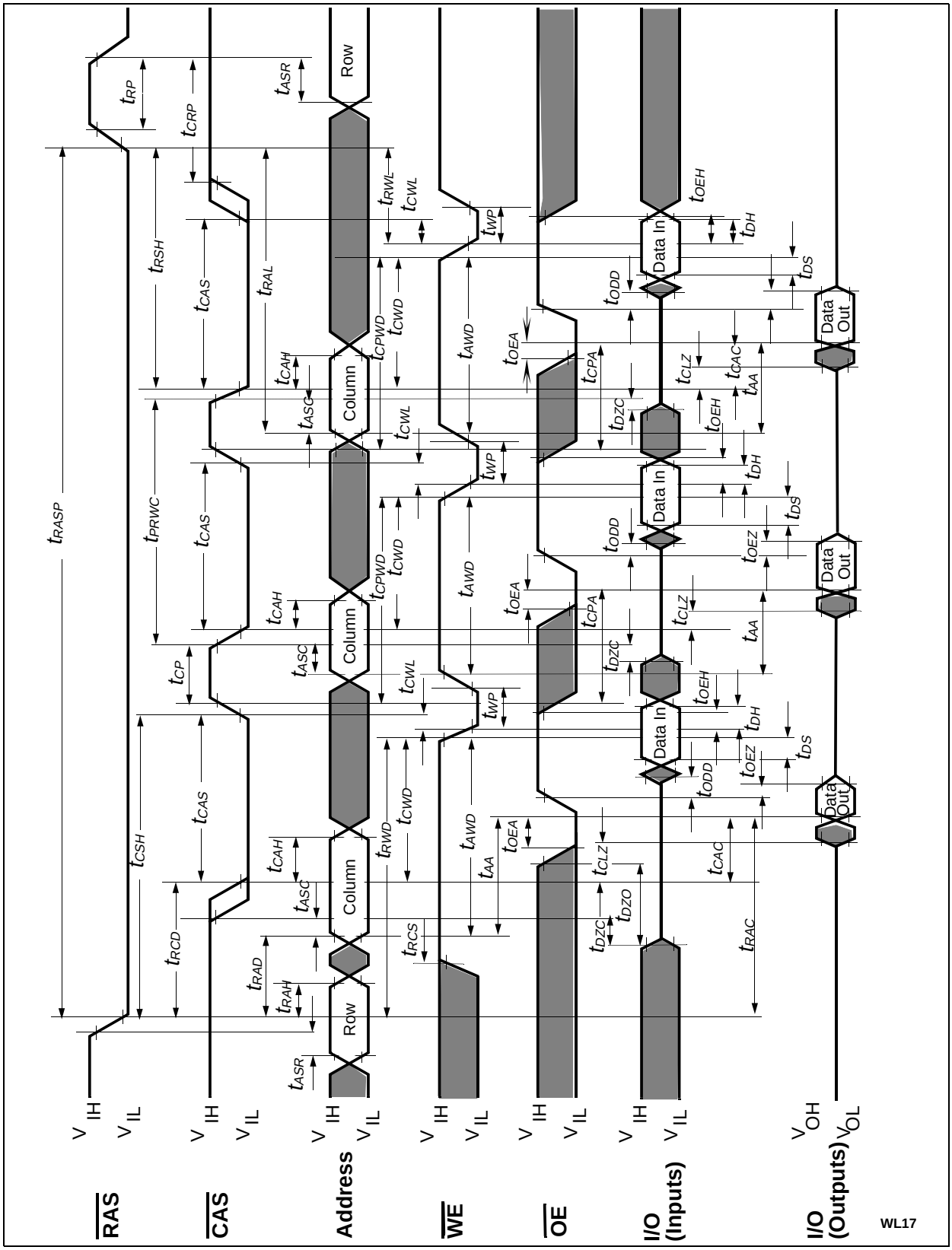

WL17

Hyper Page Mode (EDO) Late Write and Read-Modify Write Cycle

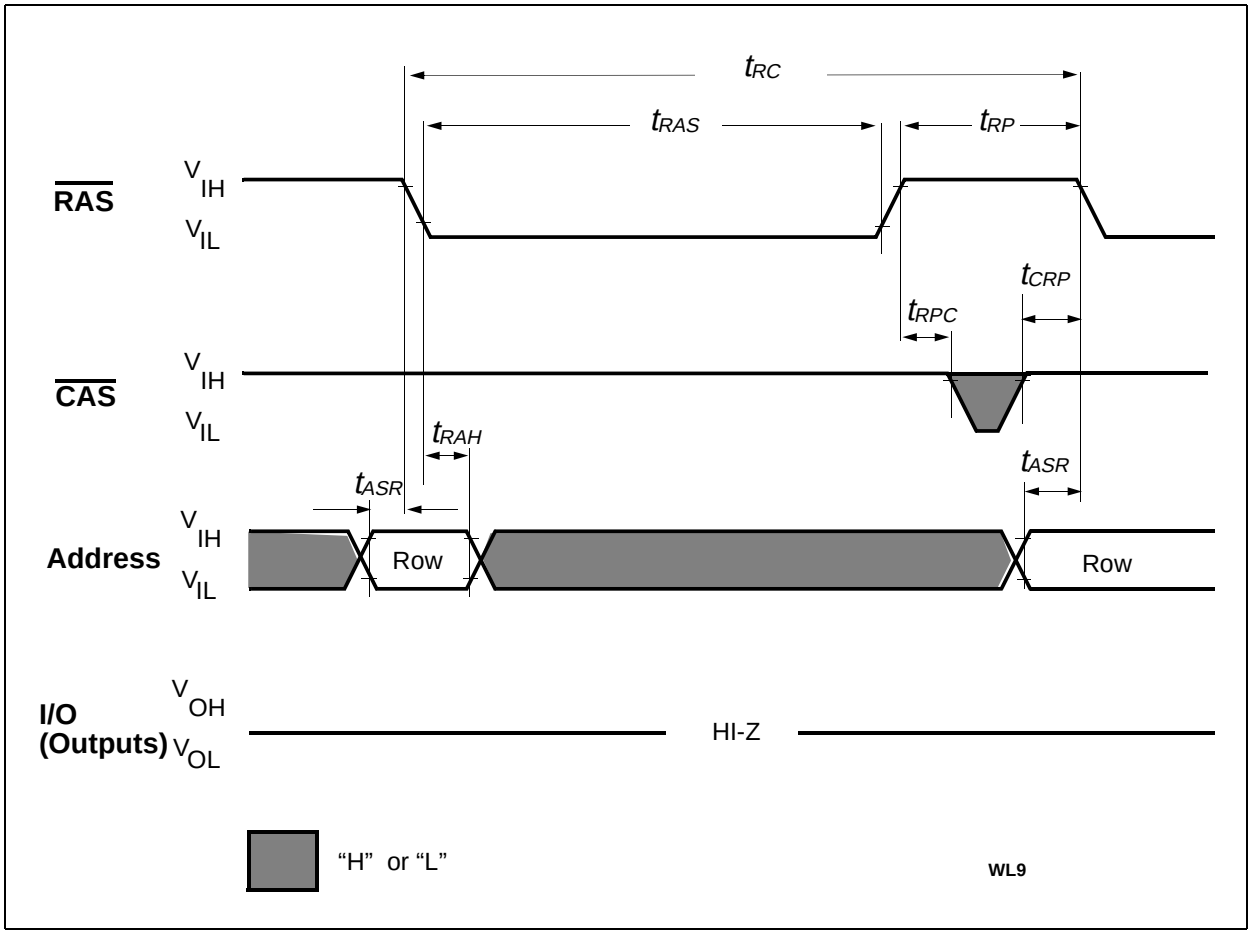

$\overline{\text{RAS}}$-Only Refresh Cycle

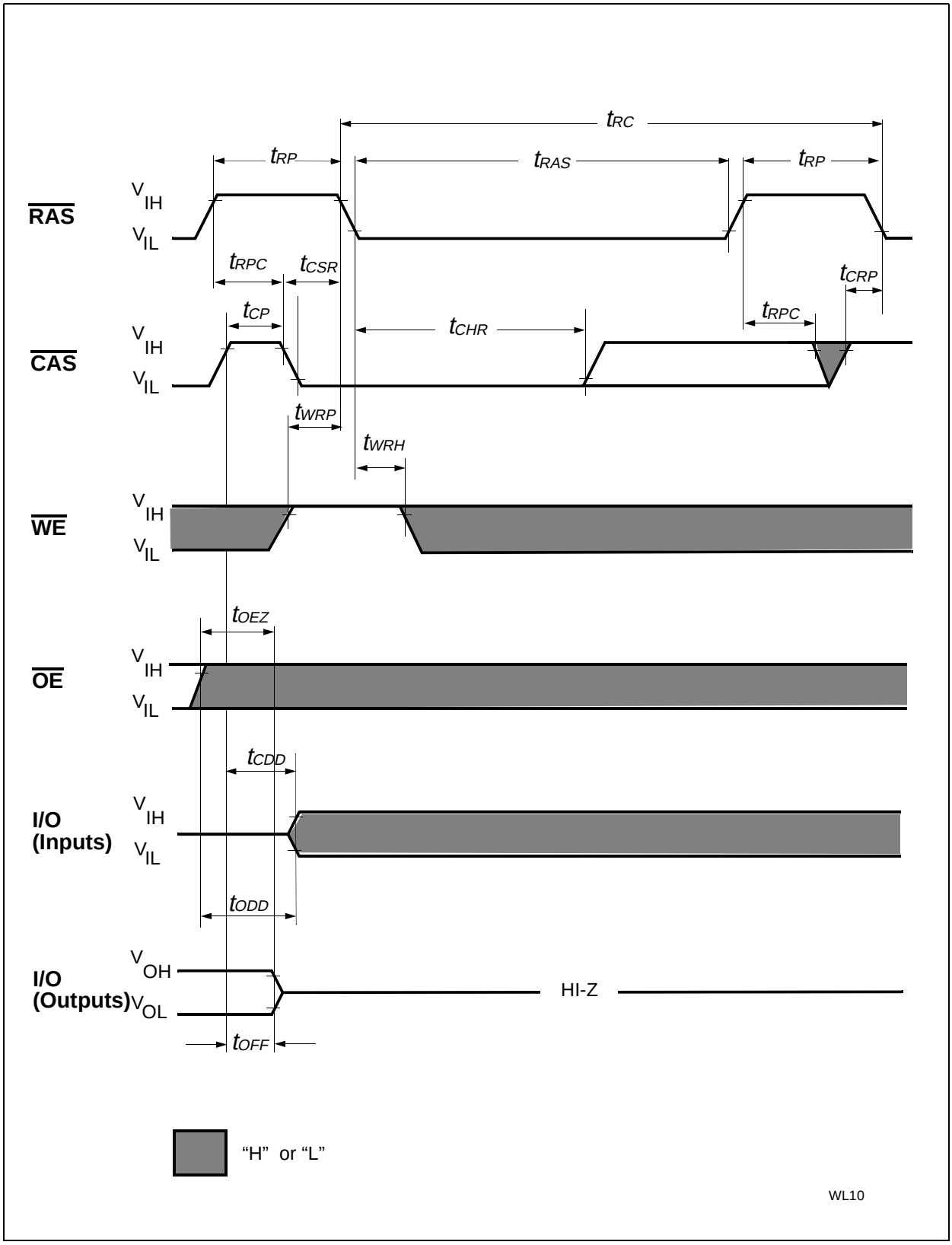

$\overline{\text{CAS}}$-Before-$\overline{\text{RAS}}$ Refresh Cycle

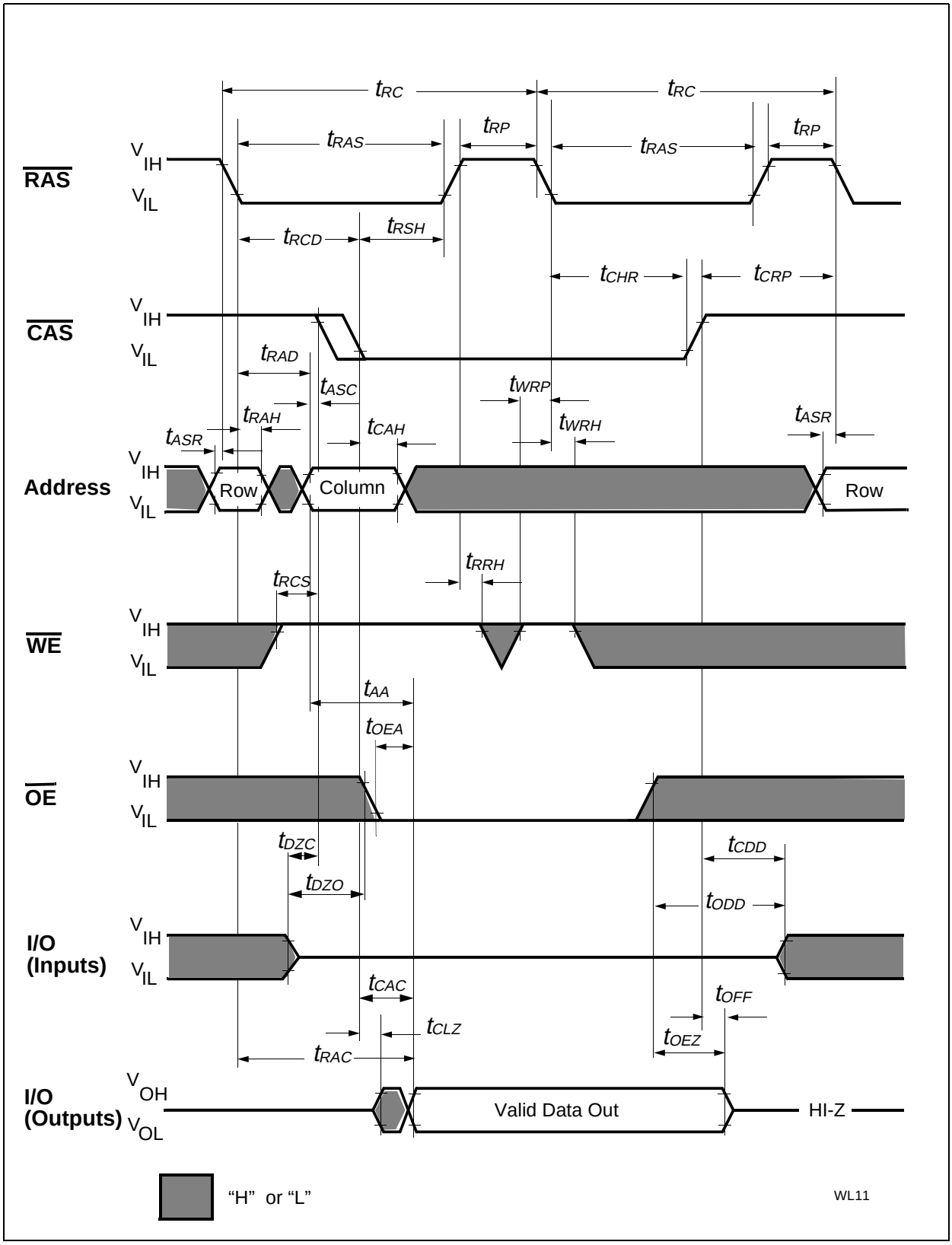

Hidden Refresh Cycle (Read)

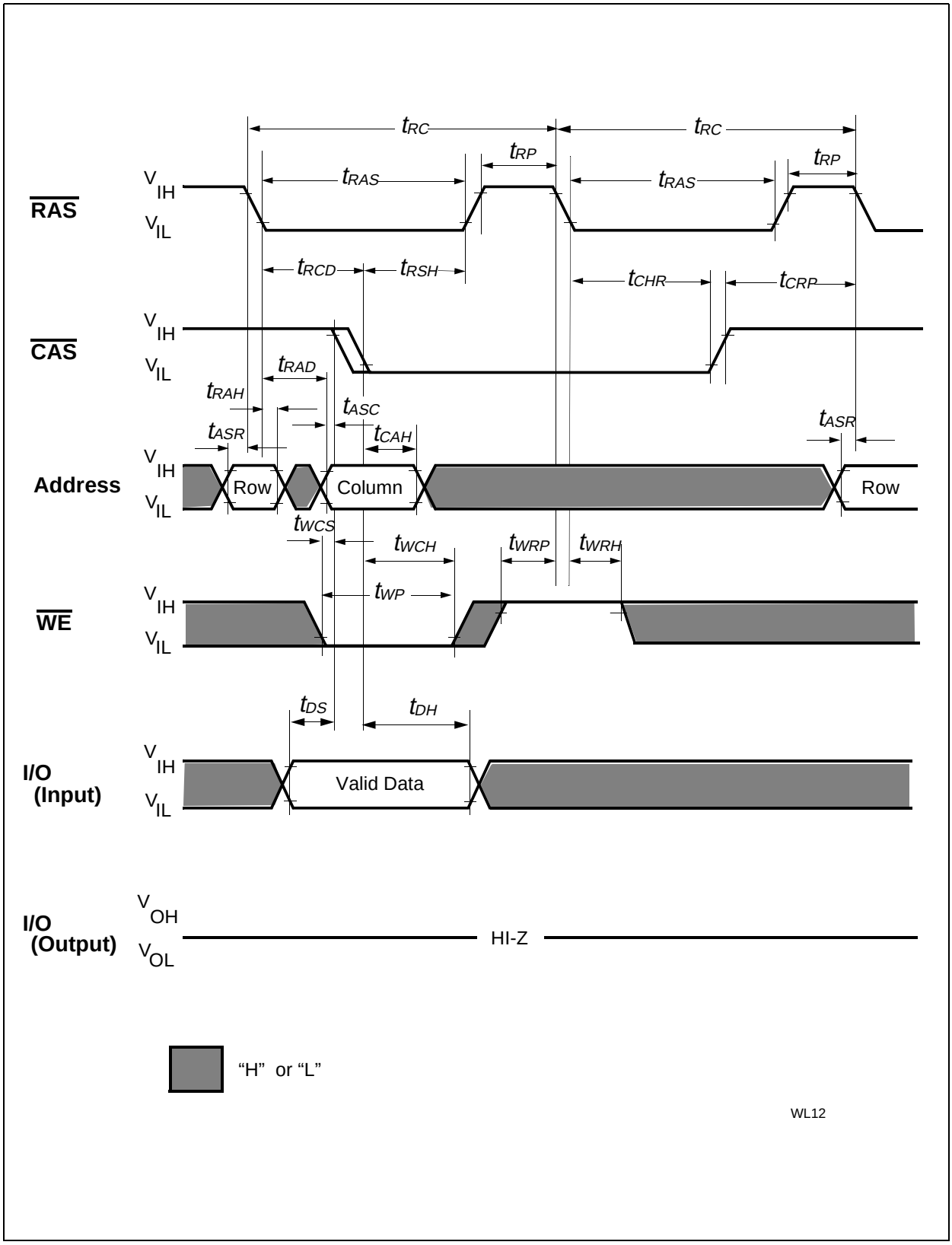

Hidden Refresh Cycle (Early Write)

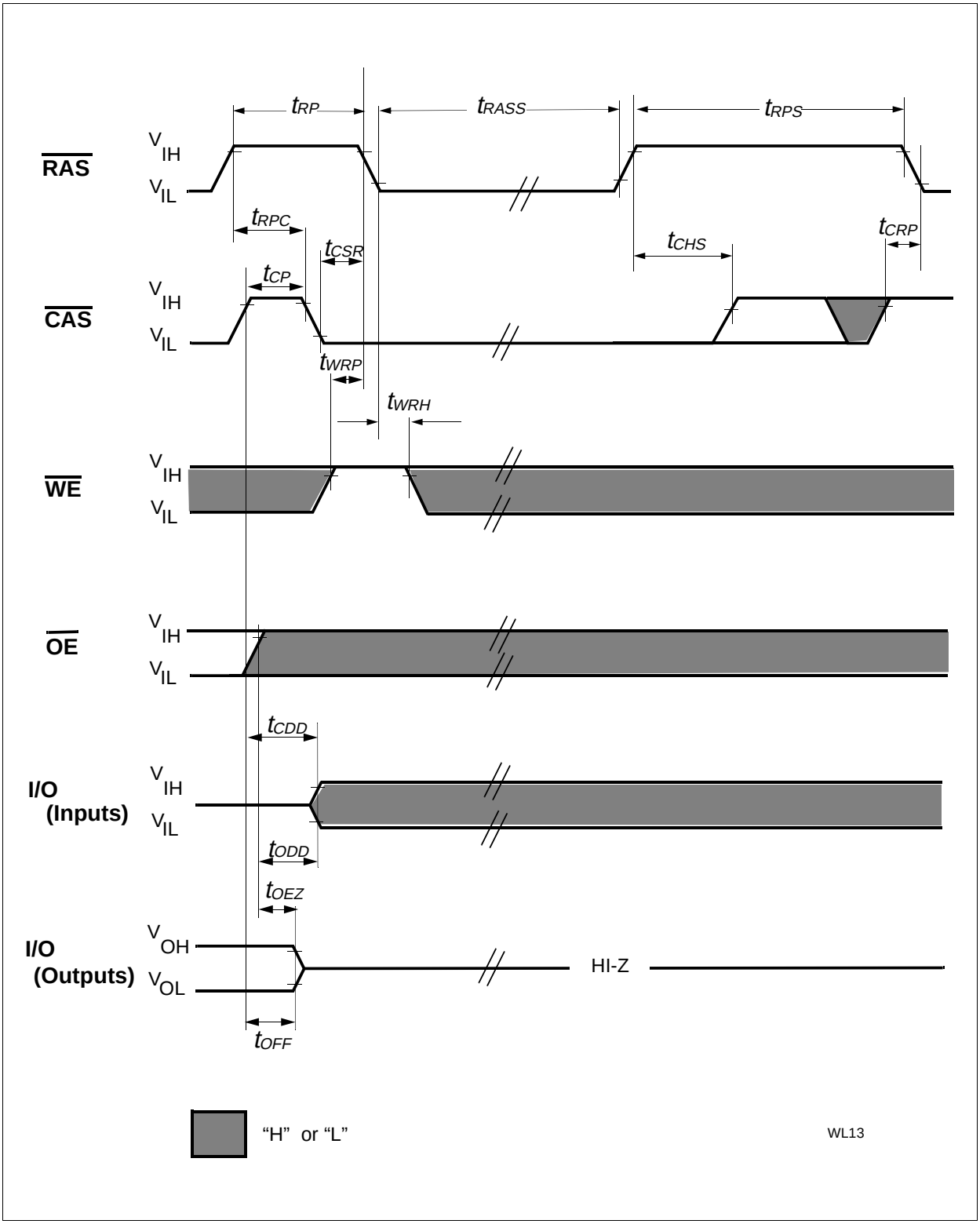

$\overline{CAS}$ before $\overline{RAS}$ Self Refresh Cycle

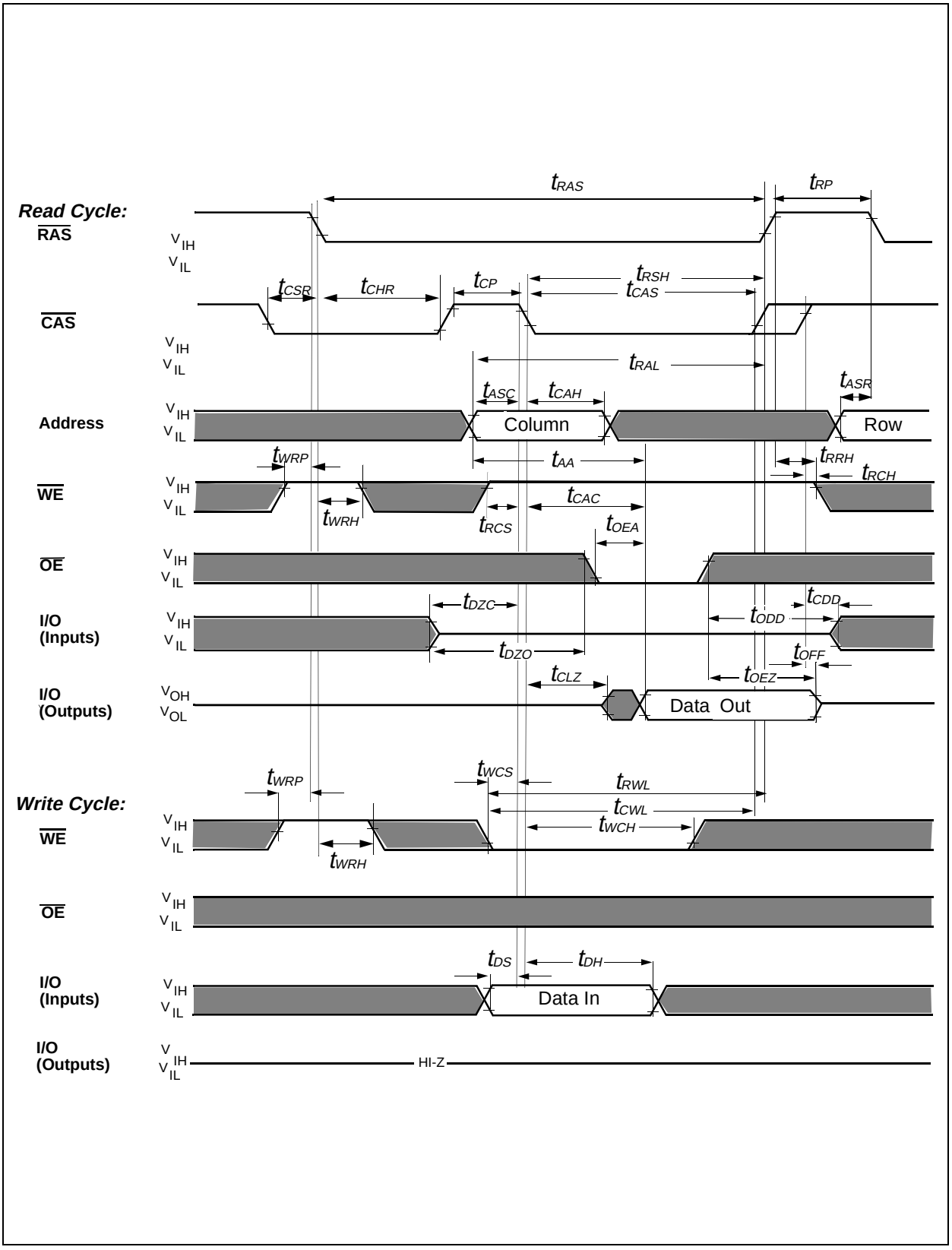

CAS-Before-RAS Refresh Counter Test Cycle

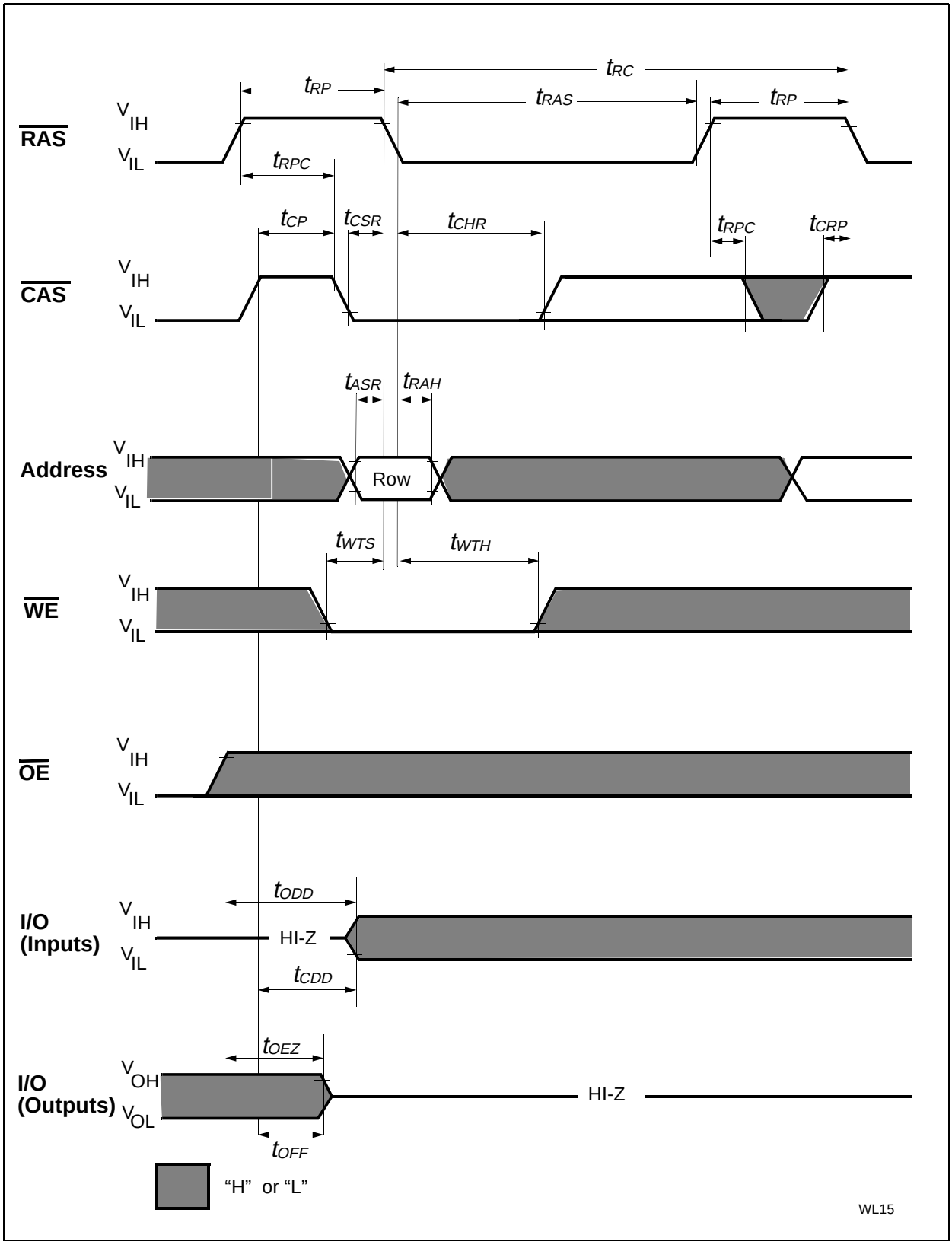

Test Mode Entry

Test Mode

As the HYB 5116(7)405BJ/BT is organized internally as 1M x 16-bits, a test mode cycle using 4:1 compression can be used to improve test time. Note that in the 4M x 4 version the test time is reduced by 1/4 for a N test pattern.

In a test mode “write” the data from each I/O pin is written into four 1M blocks simultaneously (all “1” s or all “0” s). In test mode “read” each I/O output is used for indicating the test mode result. If the internal four bits are equal, the I/O would indicate a “1”. If they were not equal, the I/O would indicate a “0”. The WCBR cycle ($\overline{WE}$, $\overline{CAS}$ before $\overline{RAS}$) puts the device into test mode. To exit from test mode, a “$\overline{CAS}$ before $\overline{RAS}$ refresh”, “$\overline{RAS}$ only refresh” or “Hidden refresh” can be used.Refresh during test mode operation can be performed by normal read cycles or by WCBR refresh cycles.

Row addresses A0 through A9 have to kept high to perform a testmode entry cycle. All other addresses are don’t care.

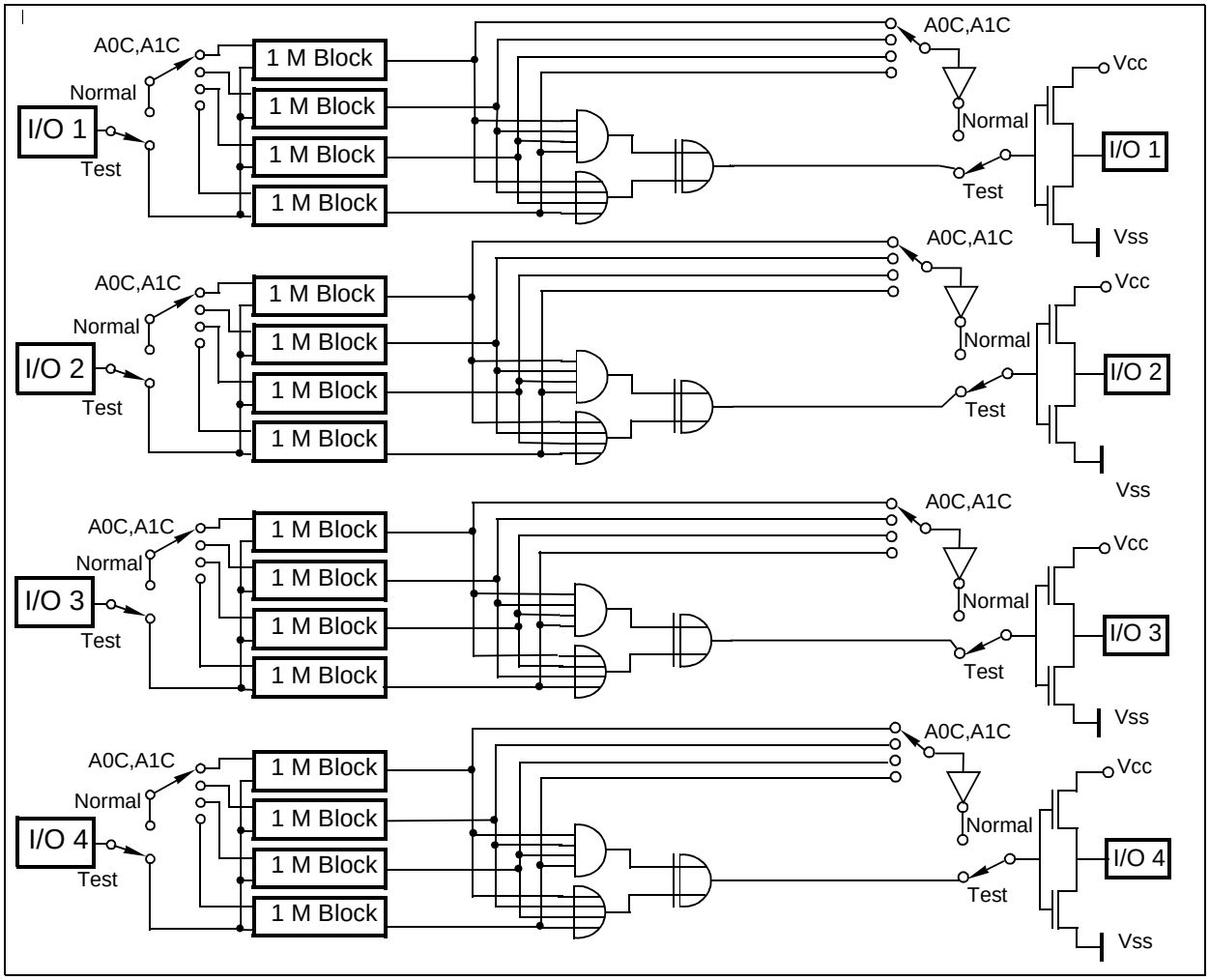

Block Diagram in Test Mode

Package Outlines

GPJ05628

Plastic Package P-TSOPII-26/24 (300mil)
(Thin small outline package, SMD)

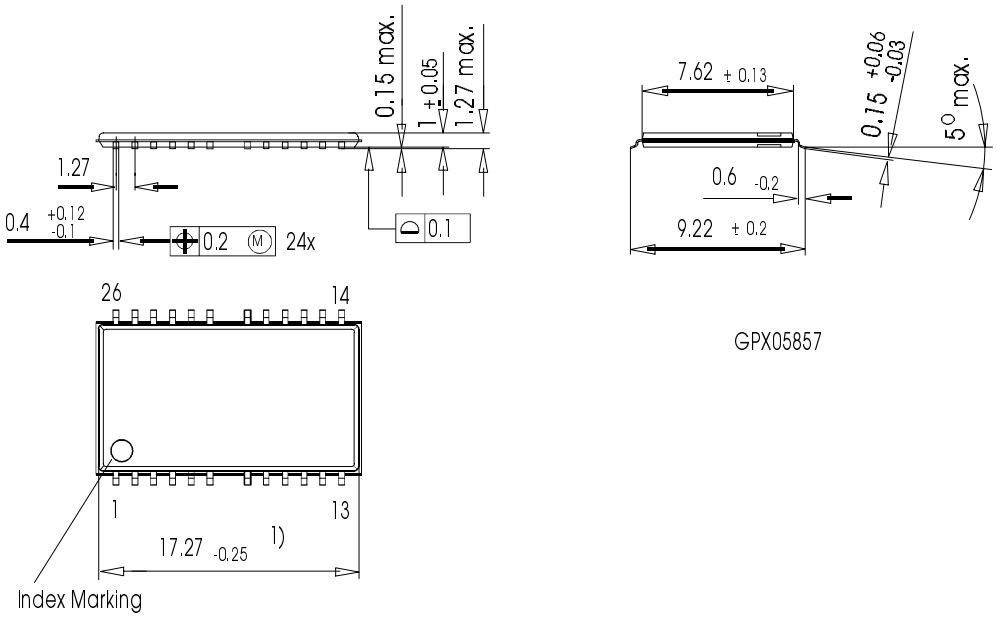

1) Does not include plastic or metal protrusion of 0.15 max. per side