TOSHIBA TRANSISTOR SILICON NPN EPITAXIAL PLANAR TYPE

2SC5085

VHF~UHF BAND LOW NOISE AMPLIFIER APPLICATIONS

Unit in mm

- Low Noise Figure, High Gain.
- NF = 1.1dB, $|S_{21e}|^2$ = 11dB (f = 1GHz)

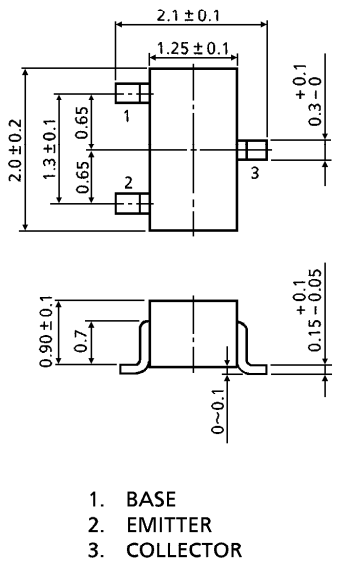

1. BASE
2. EMITTER
3. COLLECTOR

JEDEC	—
EIAJ	SC-70
TOSHIBA	2-2E1A

Weight : 0.006g

MAXIMUM RATINGS (Ta = 25°C)

CHARACTERISTIC	SYMBOL	RATING	UNIT
Collector-Base Voltage	V_{CBO}	20	V
Collector-Emitter Voltage	V_{CEO}	12	V
Emitter-Base Voltage	V_{EBO}	3	V
Base Current	I_B	40	mA
Collector Current	I_C	80	mA
Collector Power Dissipation	P_C	100	mW
Junction Temperature	T_j	125	°C
Storage Temperature Range	T_{stg}	−55~125	°C

MARKING

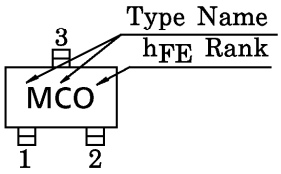

MICROWAVE CHARACTERISTICS (Ta = 25°C)

CHARACTERISTIC	SYMBOL	TEST CONDITION	MIN.	TYP.	MAX.	UNIT
Transition Frequency	f_T	V_{CE} = 10V, I_C = 20mA	5	7	—	GHz
Insertion Gain	$\|S_{21e}\|^2$ (1)	V_{CE} = 10V, I_C = 20mA, f = 500MHz	—	16.5	—	dB
	$\|S_{21e}\|^2$ (2)	V_{CE} = 10V, I_C = 20mA, f = 1GHz	7.5	11	—	
Noise Figure	NF (1)	V_{CE} = 10V, I_C = 5mA, f = 500MHz	—	1	—	dB
	NF (2)	V_{CE} = 10V, I_C = 5mA, f = 1GHz	—	1.1	2	

ELECTRICAL CHARACTERISTICS (Ta = 25°C)

CHARACTERISTIC	SYMBOL	TEST CONDITION	MIN.	TYP.	MAX.	UNIT
Collector Cut-off Current	I_{CBO}	V_{CB} = 10V, I_E = 0	—	—	1	μA
Emitter Cut-off Current	I_{EBO}	V_{EB} = 1V, I_C = 0	—	—	1	μA
DC Current Gain	h_{FE} (Note 1)	V_{CE} = 10V, I_C = 20mA	80	—	240	—
Output Capacitance	C_{ob}	V_{CB} = 10V, I_E = 0, f = 1MHz (Note 2)	—	1.0	—	pF
Reverse Transfer Capacitance	C_{re}		—	0.65	1.15	pF

(Note 1) h_{FE} Classification O : 80~160, Y : 120~240

(Note 2) C_{re} is measured by 3 terminal method with capacitance bridge.

961001EAA2

- TOSHIBA is continually working to improve the quality and the reliability of its products. Nevertheless, semiconductor devices in general can malfunction or fail due to their inherent electrical sensitivity and vulnerability to physical stress. It is the responsibility of the buyer, when utilizing TOSHIBA products, to observe standards of safety, and to avoid situations in which a malfunction or failure of a TOSHIBA product could cause loss of human life, bodily injury or damage to property. In developing your designs, please ensure that TOSHIBA products are used within specified operating ranges as set forth in the most recent products specifications. Also, please keep in mind the precautions and conditions set forth in the TOSHIBA Semiconductor Reliability Handbook.
- The information contained herein is presented only as a guide for the applications of our products. No responsibility is assumed by TOSHIBA CORPORATION for any infringements of intellectual property or other rights of the third parties which may result from its use. No license is granted by implication or otherwise under any intellectual property or other rights of TOSHIBA CORPORATION or others.
- The information contained herein is subject to change without notice.

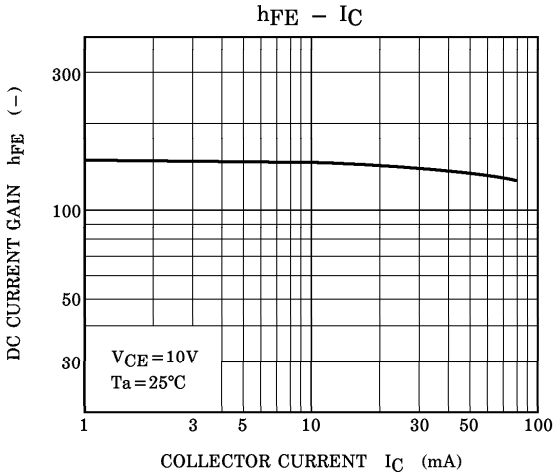
hFE – IC
DC CURRENT GAIN hFE (–)
300
100
50
30
VCE=10V
Ta=25°C
1
3
5
10
30
50
100
COLLECTOR CURRENT IC (mA)

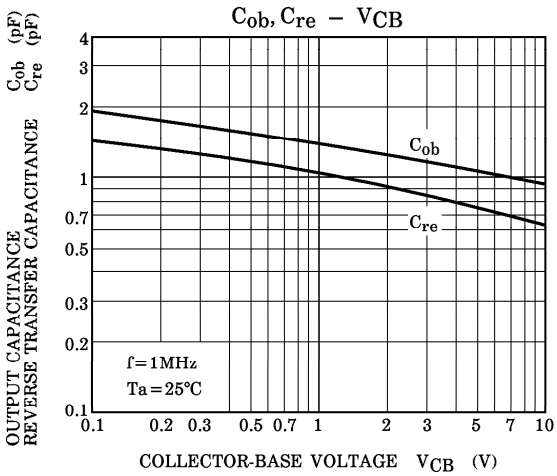
Cob, Cre – VCB
OUTPUT CAPACITANCE Cob (pF)
REVERSE TRANSFER CAPACITANCE Cre (pF)
4
3
2
1
0.7
0.5
0.3
0.2
0.1
Cob
Cre
f=1MHz
Ta=25°C
0.1
0.2
0.3
0.5
0.7
1
2
3
5
7
10
COLLECTOR-BASE VOLTAGE VCB (V)

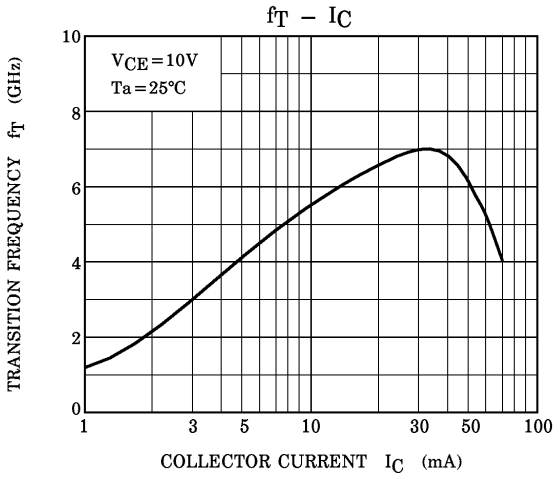
fT – IC
TRANSITION FREQUENCY fT (GHz)
10
8
6
4
2
0
VCE=10V
Ta=25°C
1
3
5
10
30
50
100
COLLECTOR CURRENT IC (mA)

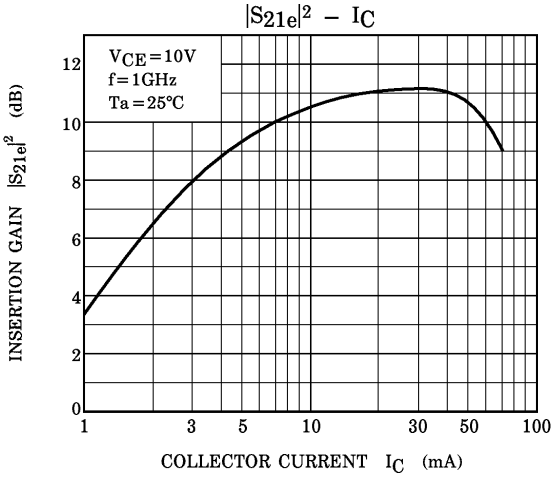
|S21e|2 – IC
INSERTION GAIN |S21e|2 (dB)
12
10
8
6
4
2
0
VCE=10V
f=1GHz
Ta=25°C
1
3
5
10
30
50
100
COLLECTOR CURRENT IC (mA)

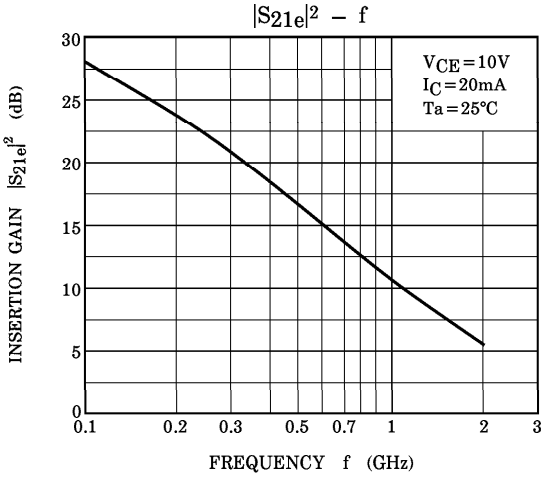
|S21e|2 – f
INSERTION GAIN |S21e|2 (dB)
30
25
20
15
10
5
0
VCE=10V
IC=20mA
Ta=25°C
0.1
0.2
0.3
0.5
0.7
1
2
3
FREQUENCY f (GHz)

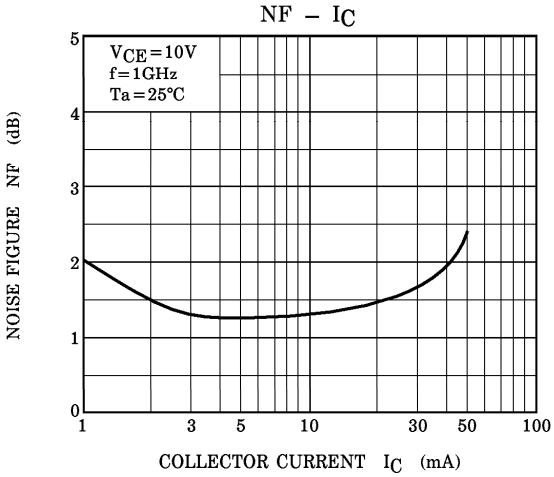
NF – IC
NOISE FIGURE NF (dB)
5
4
3
2
1
0
VCE=10V
f=1GHz
Ta=25°C
1
3
5
10
30
50
100
COLLECTOR CURRENT IC (mA)

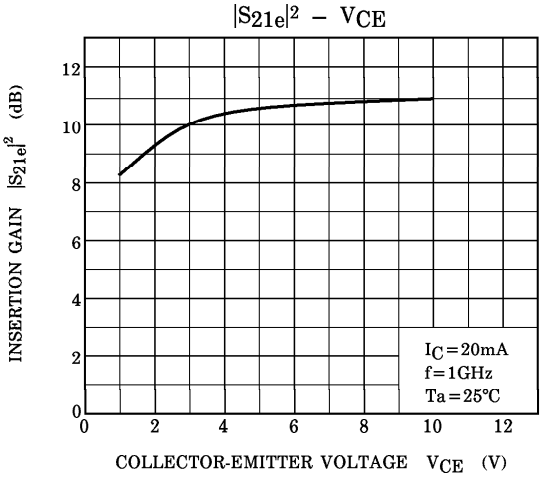

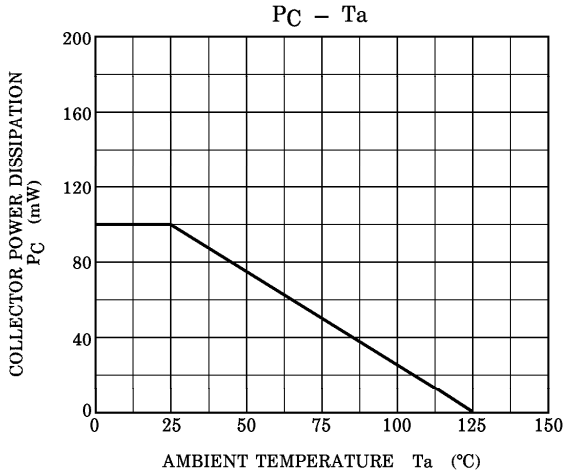

S-Parameter $Z_O = 50\Omega$, Ta = 25°C
$V_{CE} = 10V$, $I_C = 5mA$

frequency	S11		S21		S12		S22	
(MHz)	Mag.	Ang.	Mag.	Ang.	Mag.	Ang.	Mag.	Ang.
200	0.672	−73.0	9.460	128.6	0.052	53.6	0.707	−31.3
400	0.498	−115.9	6.268	105.9	0.068	46.8	0.513	−36.2
600	0.443	−141.7	4.554	93.3	0.078	49.0	0.437	−36.6
800	0.426	−158.7	3.556	84.5	0.088	53.2	0.401	−36.8
1000	0.422	−171.9	2.948	77.5	0.099	57.9	0.383	−38.3
1200	0.428	177.5	2.526	71.1	0.113	62.7	0.373	−40.6
1400	0.437	168.3	2.240	65.5	0.133	65.8	0.367	−43.9
1600	0.449	159.9	1.997	60.1	0.152	67.6	0.362	−48.2
1800	0.464	153.1	1.821	55.0	0.171	68.7	0.358	−52.8
2000	0.485	146.7	1.686	50.9	0.195	70.6	0.350	−57.6

$V_{CE} = 10V$, $I_C = 20mA$

frequency	S11		S21		S12		S22	
(MHz)	Mag.	Ang.	Mag.	Ang.	Mag.	Ang.	Mag.	Ang.
200	0.392	−116.4	16.247	109.3	0.034	59.7	0.420	−43.7
400	0.329	−152.1	8.775	94.5	0.054	66.0	0.280	−38.4
600	0.321	−170.6	6.018	86.3	0.075	69.5	0.244	−33.7
800	0.321	177.5	4.598	80.2	0.097	70.7	0.231	−31.7
1000	0.324	167.9	3.767	74.8	0.119	71.2	0.225	−31.3
1200	0.332	160.3	3.191	70.0	0.142	71.3	0.225	−32.7
1400	0.341	153.5	2.812	65.2	0.168	70.0	0.225	−36.2
1600	0.352	146.6	2.502	60.7	0.190	68.4	0.222	−40.3
1800	0.362	142.2	2.264	56.5	0.212	66.8	0.217	−44.9
2000	0.379	137.7	2.092	52.8	0.236	66.3	0.212	−49.4

S_{11e}
$V_{CE}=10V$
$I_C=5mA$
Ta=25°C
(UNIT : Ω)

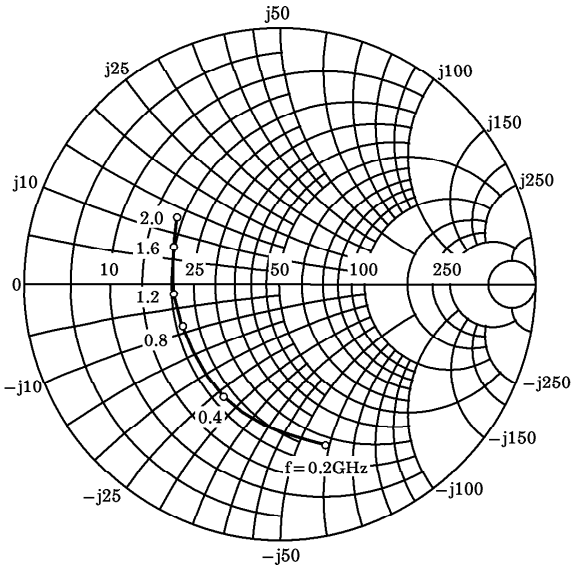

S_{21e}
$V_{CE}=10V$
$I_C=5mA$
Ta=25°C

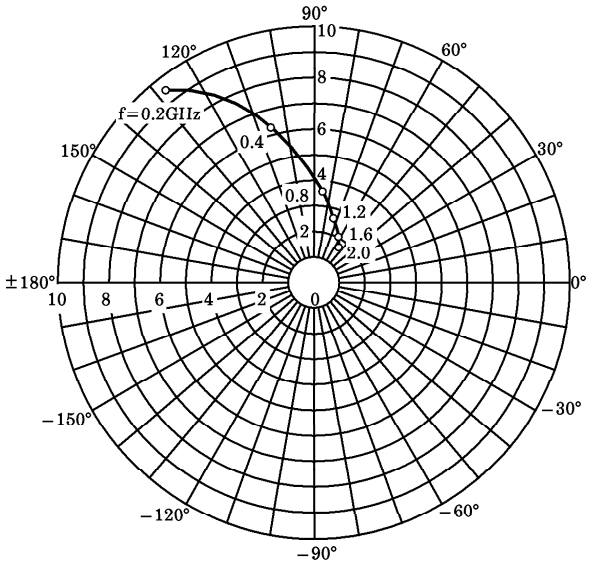

S_{12e}
$V_{CE}=10V$
$I_C=5mA$
Ta=25°C

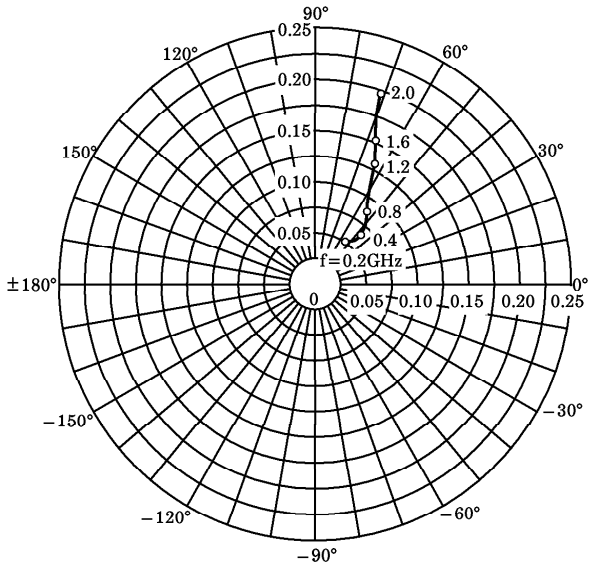

S_{22e}
$V_{CE}=10V$
$I_C=5mA$
Ta=25°C
(UNIT : Ω)

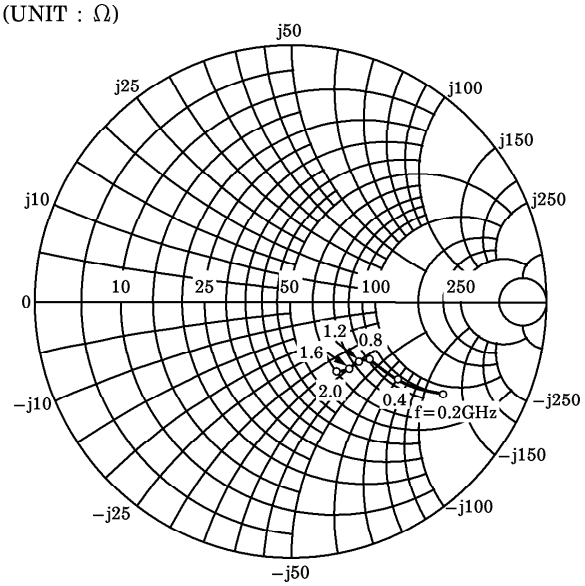

S_{11e}
$V_{CE}=10V$
$I_C=20mA$
Ta=25°C
(UNIT : Ω)

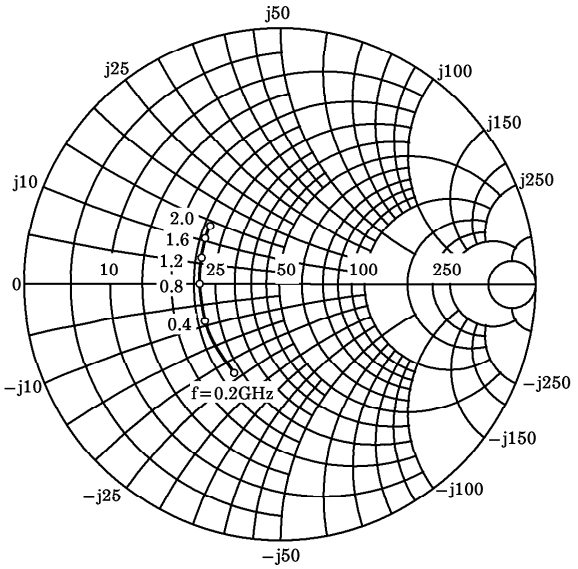

S_{21e}
$V_{CE}=10V$
$I_C=20mA$
Ta=25°C

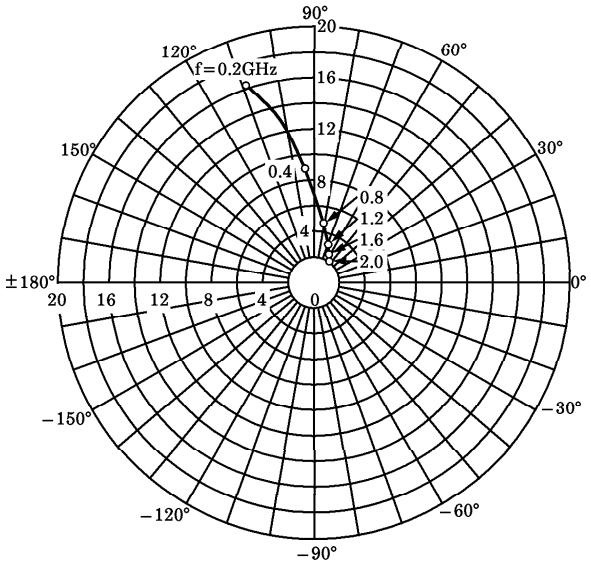

S_{12e}
$V_{CE}=10V$
$I_C=20mA$
Ta=25°C

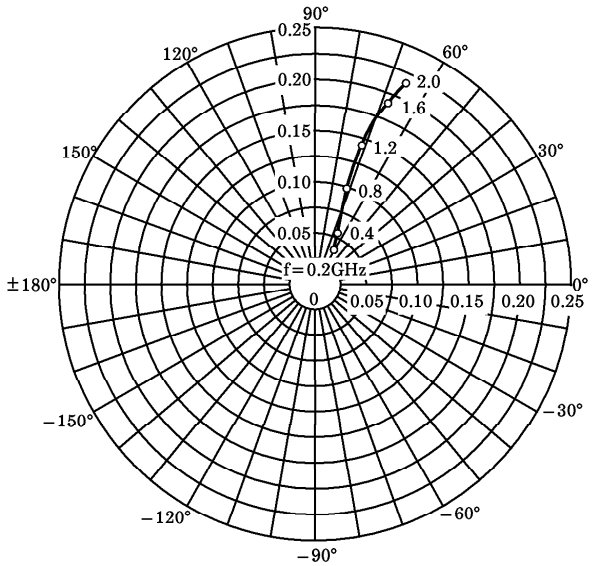
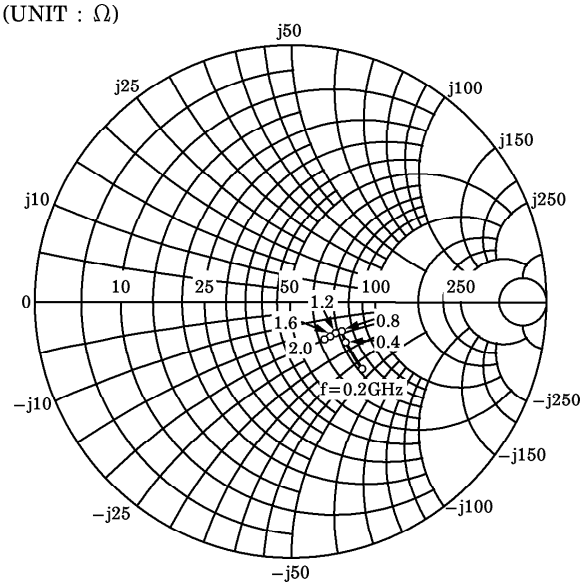
S_{22e}
$V_{CE}=10V$
$I_C=20mA$
Ta=25°C
(UNIT : Ω)