TELEFUNKEN electronic
Creative Technologies

U 237 BG · U 247 BG
U 257 BG · U 267 BG

T-52-13-07

Monolithic Integrated Circuits

Application: To drive LED-displays with 5 or 10 diodes

Features:

- Wide supply voltage range
- High LED current
- Low power dissipation due to series connection of LED's
- Different colour LED's can be connected arbitrary
- No peripheral components are necessary
- High input resistance
- Eligible between:
  5 LED's line with linear scale division with U 237 BG or U 247 BG
  5 LED's line with logarithmic scale division with U 257 BG or U 267 BG
  10 LED's line with linear scale division with U 237 BG and U 247 BG
  10 LED's line with logarithmic scale division with U 257 BG and 267 BG

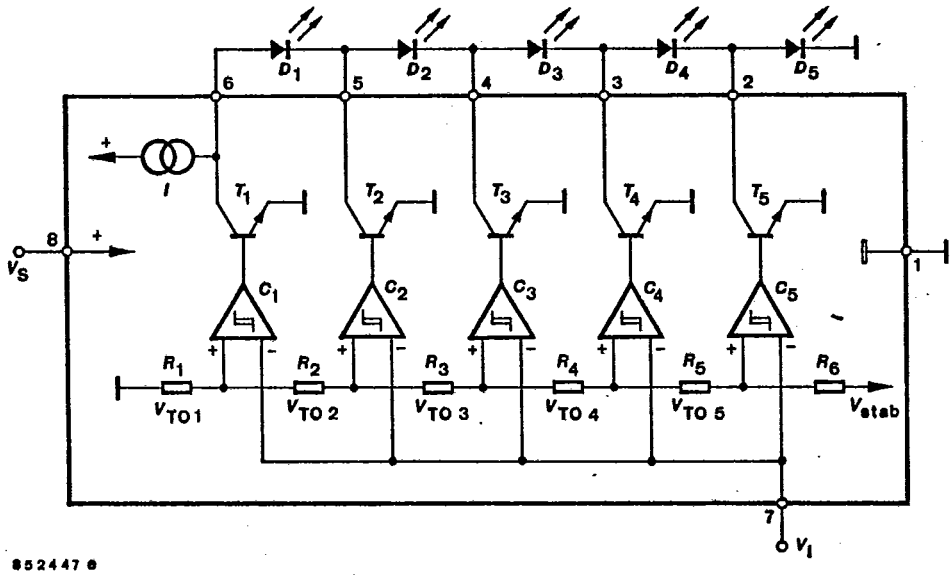

Fig. 1 Block diagram LED scale IC

T1.2/1310.0386 E1

U 237 BG · U 247 BG
U 257 BG · U 267 BG

T-52-13-07

Absolute maximum ratings

Supply voltage	V_S	25	V
Input voltage	V_I	5	V
Input current	I_I	0.5	mA
Output current, maximum	$I_{O1...5}$	30	mA
Output reverse voltage	V_O	V_S	
Power dissipation T_{amb} = 60°C	P_{tot}	690	mW
Ambient temperature range			
V_S = 25 V	T_{amb}	−10...+60	°C
V_S = 18 V	T_{amb}	−10...+85	°C
Storage temperature range	T_{stg}	−15...+125	°C
Junction temperature	T_j	150	°C

Thermal resistance

		Min.	Typ.	Max.	
Junction ambient	R_{thJA}			130	K/W

Optical and electrical characteristics

V_S = 16 V, T_{amb} = 25°C, Reference point: Ground

Total current (incl. LED current)	I_S		25		mA
Supply voltage	V_S	12		25	V
Step tolerance	ΔV_I			±30	mV
Switching threshold hysteresis	ΔV_{IH}		10		mV
Input current	$-I_I$		1		μA
Output saturation voltage $I_{O1...5}$ = 20 mA	$V_{O1...5sat}$			1.1	V
Output current	$-I_{O5}$		20		mA

0365 E-10

U 237 BG · U 247 BG
U 257 BG · U 267 BG

(T-52-13-07

Circuit description

The IC's are driving circuits for a 5 or 10 LED bar display having an integrated current generator whose current is adjusted to 20 mA.

Light emitting diodes are connected in series in order to reduce power dissipation and to have the same current flow to the supply in every operating condition, Fig. 2

For red LED's (i.e. TLSR 5100) the supply voltage is 12 V whereas in case of green or yellow diodes (i.e. TLSY 5100, TLSG 5100) the voltage is 16 V.

The input thresholds are:

U 237 BG: 0.2 V, 0.4 V, 0.6 V, 0.8 V, 1.0 V

U 247 BG: 0.1 V, 0.3 V, 0.5 V, 0.7 V, 0.9 V

U 257 BG: 0.18 V/−15 dB, 0.5 V/−6 dB, 0.84 V/−1.5 dB, 1.19 V/+1.5 dB, 2.0 V/+6 dB

U 267 BG: 0.1 V/−20 dB, 0.3 V/−10 dB, 0.71 V/−3 dB, 1.0 V/0 dB, 1.41 V/+3 dB

If a voltage greater than the first threshold but less than the second threshold is applied one LED is lighted, if the input voltage is between the second and the third threshold, then two LED's are in operation and so on.

Fig. 2 shows the circuit diagram of a bar display with 5 LED's.

By choosing a parallel connection of the inputs of an U 237 BG and an U 247 BG it is possible to get a 10 LED bar display with thresholds 0.1 V, 0.2 V, 0.3...1.0 V.

By choosing a parallel connection of the inputs of an U 257 BG and an U 267 BG it is possible to get a 10 LED bar display with thresholds: −20 dB, −15 dB, −10 dB...+6 dB.

Fig. 3 shows the circuit diagram of a bar display with 10 LED's.

Applications:

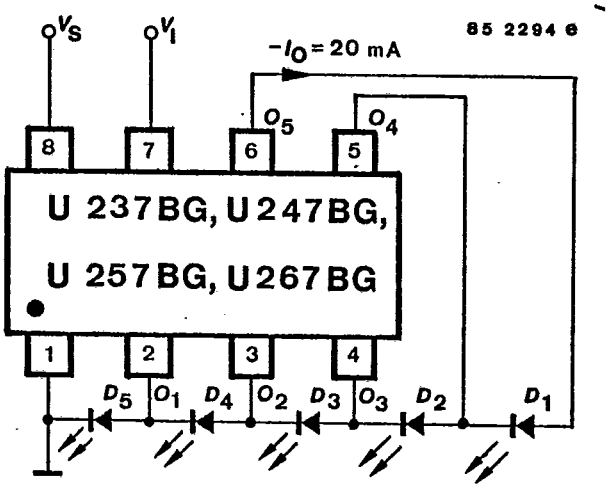

Fig. 2 Bar display with 5 LED's

U 237 BG · U 247 BG
U 257 BG · U 267 BG

T-52-13-07

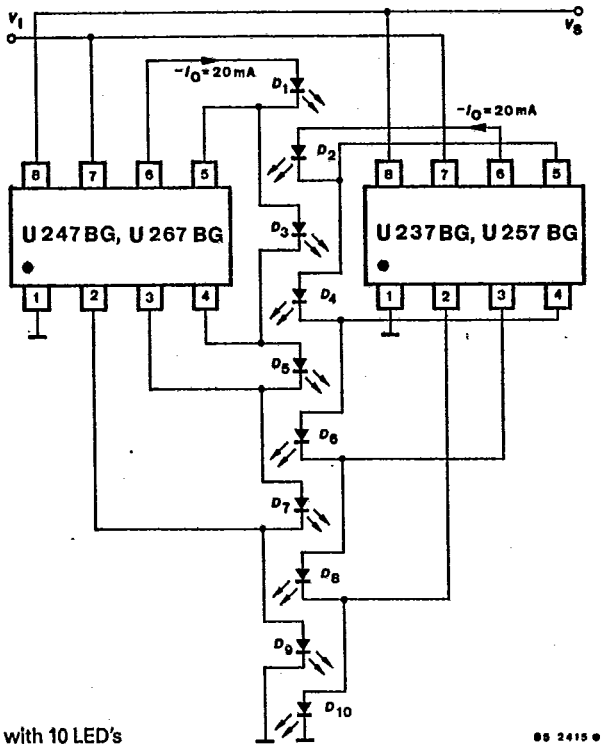

Fig. 3 Bar display with 10 LED's

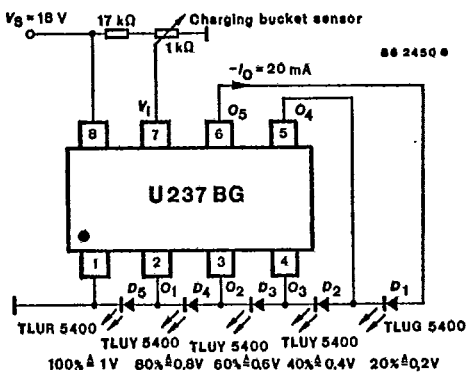

Fig. 4 Liquid level display with linear resistance pickup

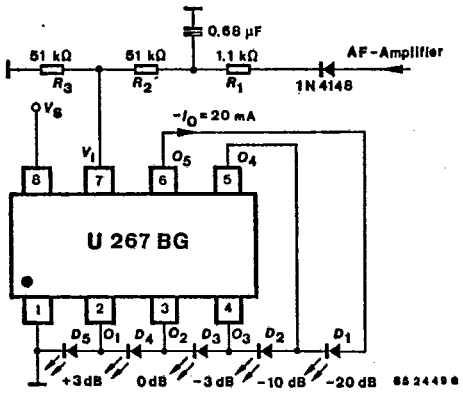

Fig. 5 Logarithmic AF recording level display with 5 LED's

U 237 BG · U 247 BG
U 257 BG · U 267 BG

T-52-13-07

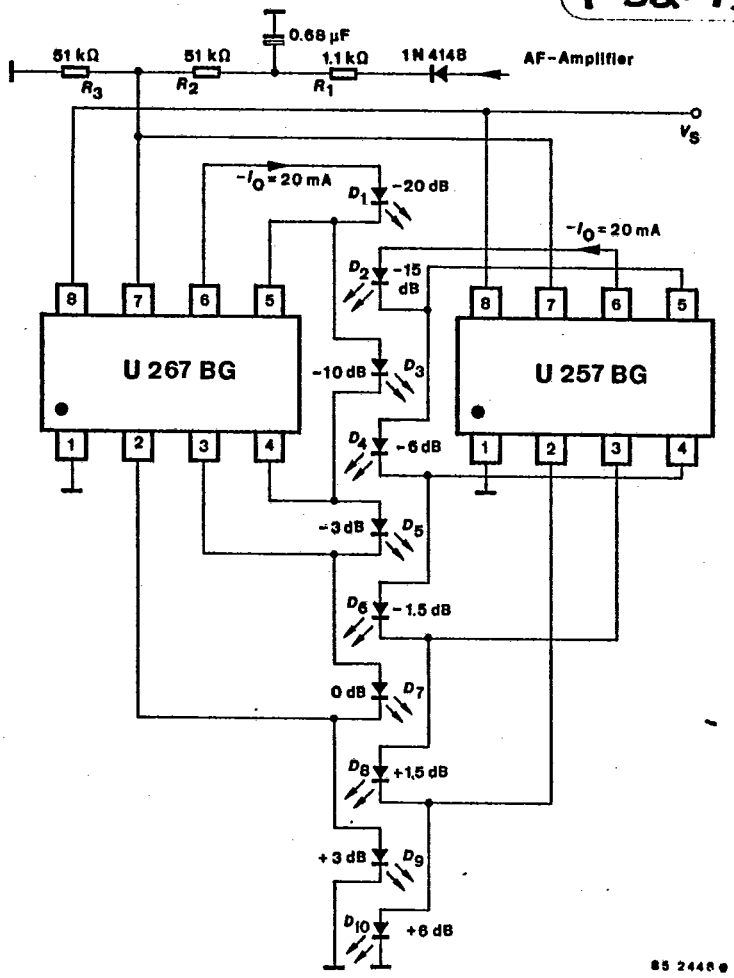

Fig. 6 Logarithmic AF recording level display with 10 LED's

U 237 BG · U 247 BG
U 257 BG · U 267 BG

T-52-13-07

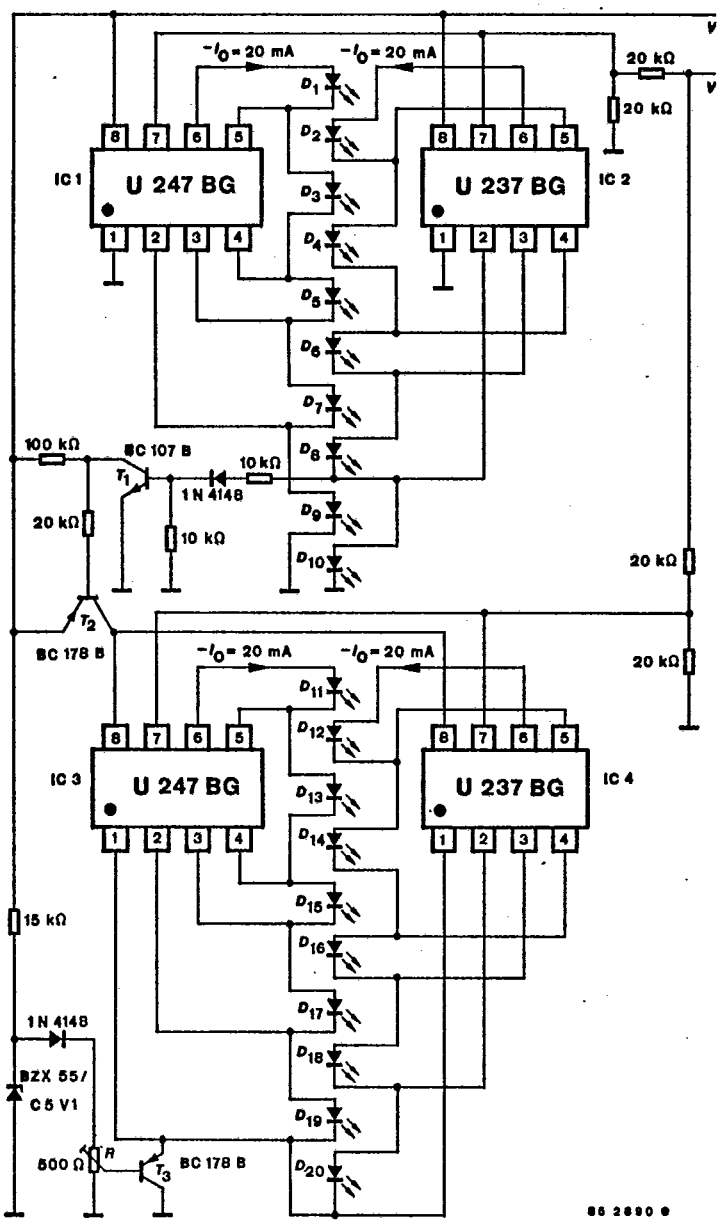

Fig. 7 Driver for 20 LED's

U 237 BG · U 247 BG
U 257 BG · U 267 BG

T-52-13-07

Dimensions in mm

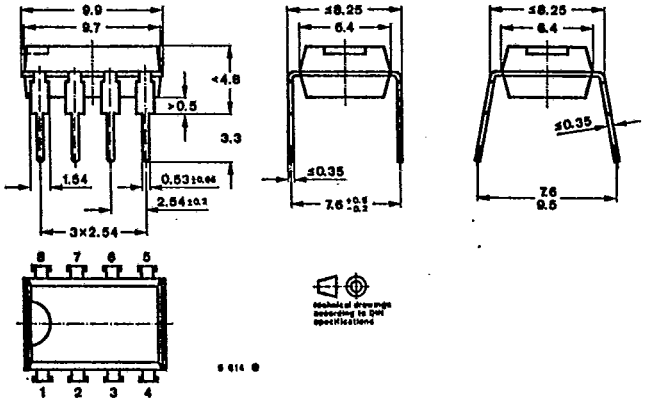

Plastic case
DIP 8
Weight max. 1 g